MURR ELEKTRONIK
stay connected

M12 FEMALE 0° F&B

PVC 4X0.34 GRAY, UL/CSA 5m

Plug Connectors for Food & Beverage
Female straight
M12, 4-pole
A-coded
Stainless steel 1.4404 (V4A)
Profile gasket
Further cable lengths on request.

Link to Product

Illustration

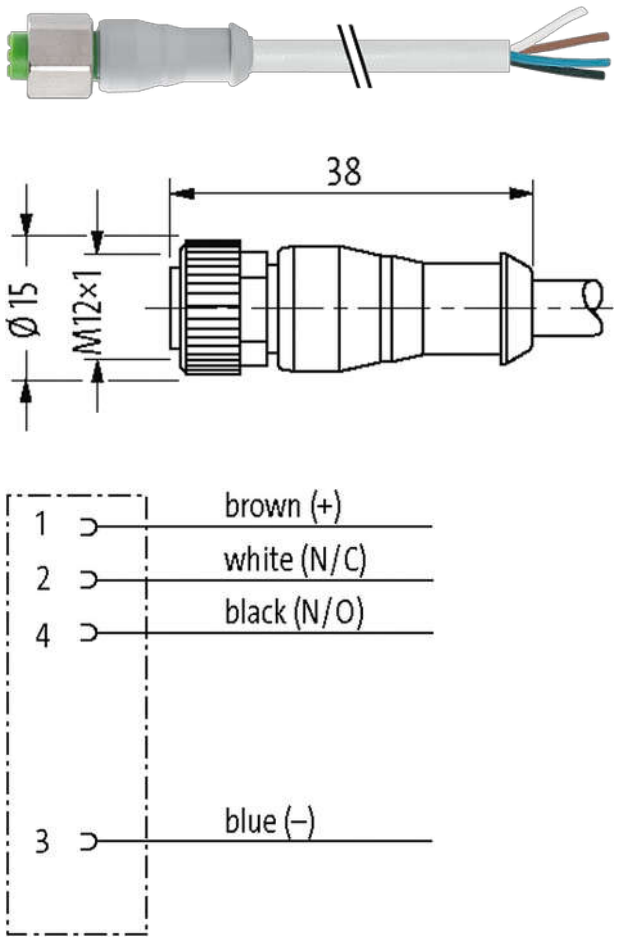

Product may differ from Image

Approvals

ECOLAB	c UL us Listed *	* only for products with UL/CSA approved cable	cCSAus

Form

Form	12221

General data

The information in this brochure has been compiled with the utmost care.
Liability for the correctness completeness and topicality of the information is restricted to gross negligence. Version: 11/20

Mounting method	inserted, tightened
Pollution Degree	3
Stripping length (jacket)	20 mm
Temperature range	-25...+85 °C, depending on cable quality
Cables	
Cable identification	214
Cable Type	1 (PVC)
Approval (cable)	UL (AWM-Style 2464/1731), CSA
Cable weight [g/m]	40,70
Material (wire)	Cu wire, bare
Resistor (core)	max. 60 Ω/km (20 °C)
Single wire Ø (core)	0.15 mm
Construction (core)	19× 0.15 mm (multi-strand wire class 5)
Diameter (core)	4× 0.34 mm²
AWG	similar to AWG 22
Material (wire isolation)	PVC
Material property (wire isolation)	CFC-, cadmium-, silicone- and lead-free
Shore hardness (wire isolation)	45 ±5 D
Wire-Ø incl. isolation	1.25 mm ±5%
Color/numbering of wires	br, bk, bl, wh
Stranding combination	4 wires twisted
Shield	no
Material (jacket)	PVC
Material property (jacket)	CFC-, cadmium-, silicone- and lead-free
Shore hardness (jacket)	85 ±5 A
Outer-Ø (jacket)	5.0 mm ±5%
Color (jacket)	gray
chemical resistance	good resistance to oil, gasoline and chemicals
thermal resistance	flame retardant UL 1581 VW1 / CSA FT1
Nominal voltage	UL 300 V AC
Test voltage	2000 V AC
Current load capacity	to DIN VDE 0298-4
Temperature range (fixed)	-30...+80 °C
Temperature range (mobile)	-5...+80 °C
Bend radius (fixed)	5× outer Ø
Bend radius (moving)	10× outer Ø
No./diameter of wires	4× 0.34 mm²
Wire isolation	PVC (br, wh, bl, bk)
Jacket Color	gray
Material (jacket)	PVC (UL/CSA)
Outer Ø	5.0 mm ±5%
Bend radius (moving)	10× outer Ø
Temperature range (fixed)	-30...+80 °C
Temperature range (mobile)	-5...+80 °C
Technical Data	
Operating voltage	max. 250 V AC/DC
Rated surge voltage	2.5 kV
Operating current per contact	max. 4 A

The information in this brochure has been compiled with the utmost care.
Liability for the correctness completeness and topicality of the information is restricted to gross negligence. Version: 11/20

No. of poles	4
Material group	IEC 60664-1, category I
Coding	A-coded
LED display	no
Locking of ports	Screw thread (M12×1 mm) recommended torque 0.6 Nm, self-securing
Compression gland	M12 (SW14)
Protection	IP65, IP68 inserted and tightened (EN 60529)
Locking material	Stainless steel 1.4404 (V4A)
suitable for corrugated tube (internal Ø)	10 mm

Commercial data

country of origin	DE
customs tariff number	85444290
EAN	4048879108928
eClass	27279218
Packaging unit	1

Sketch

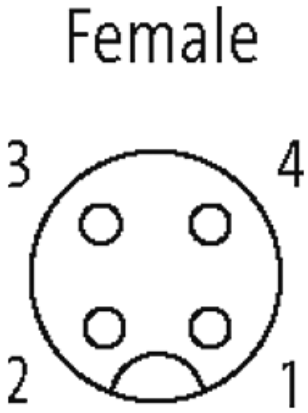

Product may differ from Image

The information in this brochure has been compiled with the utmost care.
Liability for the correctness completeness and topicality of the information is restricted to gross negligence. Version: 11/20