E11806

Connecting cable with socket

ADOAH080MSS0010C08

For 8-pole sockets the core colours are not standardised.
Please note the wiring of the sensor and the sockets (see data sheet).

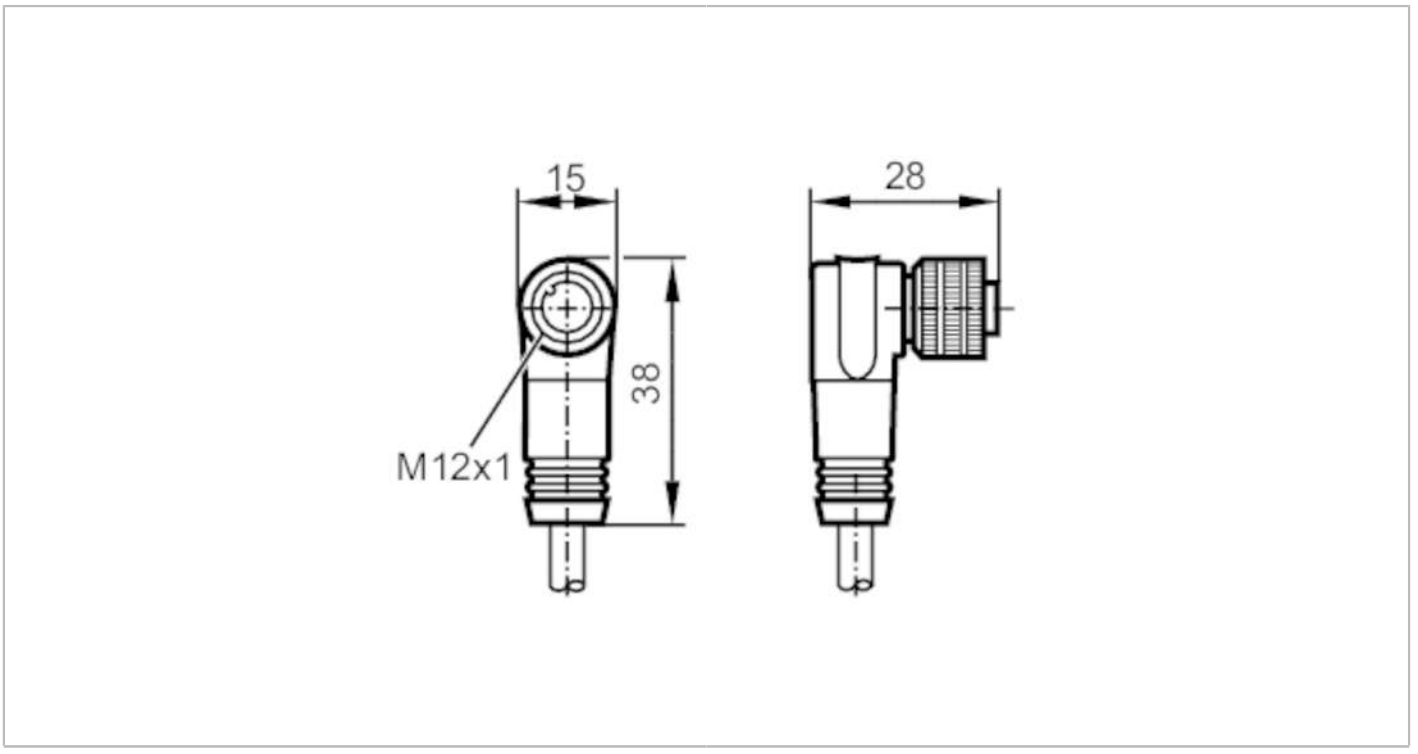

Application		
Special feature		Free from silicone; Gold-plated contacts; Screened cable
Free from silicone		yes
Electrical data		
Operating voltage	[V]	< 30 AC / < 36 DC
Protection class		III
Operating conditions		
Ambient temperature	[°C]	-25...80
Protection		IP 67
Mechanical data		
Weight	[g]	682.5
Dimensions	[mm]	28 x 15 x 38
Materials		PUR
Moulded-body material		PUR
Material nut		brass, nickel-plated
Remarks		
Pack quantity		1 pcs.

E11806

Connecting cable with socket

ADOAH080MSS0010C08

Electrical connection

Cable: 10 m, PUR, black, Ø 6.2 mm, shielded; 8 x 0.25 mm²

Electrical connection - socket

Connector: 1 x M12, angled; coding: A; Moulded body: PUR; Locking: brass, nickel-plated; Contacts: gold-plated; Tightening torque: 0.7...0.9 Nm; Shielded connection cable: screen connected



Connection

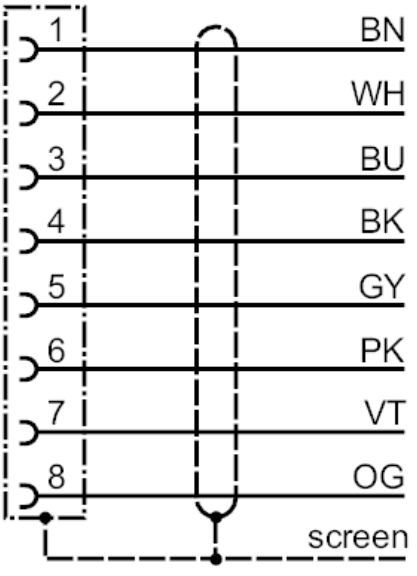

	colours to DIN EN 60947-5-2
	Core colours :
BK =	black
BN =	brown
BU =	blue
GY =	grey
PK =	pink
OG =	orange
VT =	lilac
WH =	white
screen =	screen