Guard Locking Switch Stainless Steel **Type: KL3-SS-P2L**

FEATURES:



Solenoid Locking Interlock Safety Switch featuring
POWER TO LOCK with Guard Holding to 2000N (200Kg) (F1Max)

The KL3-SS-P2L Series Guard Locking switches have a slim stainless steel 316 body design and have been developed with a holding force of 2000N to keep large guard doors closed until hazards have been removed.

They are Power to Lock - Spring to Unlock - suitable for applications where immediate unlocking is required at removal or loss of power. (They are NOT suitable for machines with a running down time).

The Stainless Steel 316 housing provides a durable robust hold closed. Flexible actuators are available to aid where some alignment is a problem.

IP69K enclosure protection is maintained by a double seal lid gasket design and metal fixings.

They have a slim profile and are designed to fit on 50mm (2") frame sections or to applications where space is restricted.

The head will rotate to provide up to 8 actuator entry positions.

FUNCTIONAL SPECIFICATIONS:

Positive Break Contacts to EN60947-5-1
High Functional Safety to ISO13849-1
Stainless Steel 316 Housing and fittings
Connects to most Safety Relays to give up to PLe Cat.4
Quick Connector version available for ease of installation
Machine safety contacts open when power is released
LED Status of Solenoid Power

2NC Safety Circuits:

1NC 1NO Auxiliary circuits - Actuator/Door Status

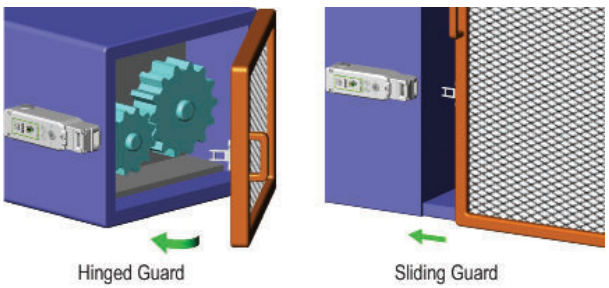



8 Actuator Entry Positions
Rotatable Head

ACTUATOR OPTIONS (see p76)

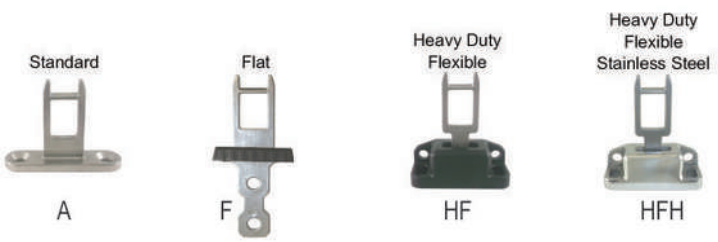

INSERTION OF ACTUATOR

	6.0	5.0	0mm
11/12	Open		Solenoid Energised
21/22	Open		Solenoid Energised
33/34	Open		Tongue Inserted
43/44		Open	Tongue Inserted

For all IDEM switches the normally closed (NC) circuits are closed when the guard is closed actuator inserted.

Standards:	ISO14119 EN60947-5-1 EN60204-1 ISO13849-1 EN62061 UL508
Safety Classification and Reliability Data:	
Mechanical Reliability B10d	2.5 x 10^6 operations at 100mA load
ISO13849-1	Up to PLe depending upon system architecture
EN62061	Up to SIL3 depending upon system architecture
Safety Data – Annual Usage	8 cycles per hour/24 hours per day/365 days
PFHd	3.44 x 10^{-8}
Proof Test Interval (Life)	35 years
MTTFd	356 years
Solenoid Voltage (by Sales Number)	24V dc
Solenoid Wattage	12W (Inrush 50W)
Utilization Category	AC15 A300 3A
Thermal Current (Ith)	5A
Rated Insulation/Withstand Voltages	600Vac/2500Vac
Travel for Positive Opening	10mm
Actuator Entry Minimum Radius	175mm Standard 100mm Heavy Duty
Maximum Approach/Withdrawal Speed	600mm/s
Holding Force	F1Max 2000N Fzh 1538N
Body Material	Stainless Steel 316
Enclosure Protection	IP69K
Operating Temperature	-25C +40C
Vibration	IEC 68-2-6 10-55Hz + 1Hz Excursion 0.35mm 1 octave/min
Conduit Entry	Various (See Sales Number)
Fixing	4 x M5

Guard Locking Switch Stainless Steel **Type: KL3-SS-P2L**

SCHEMATIC CIRCUIT:

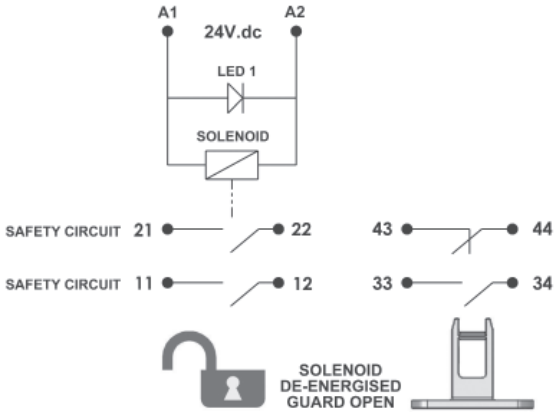

DIMENSIONS:

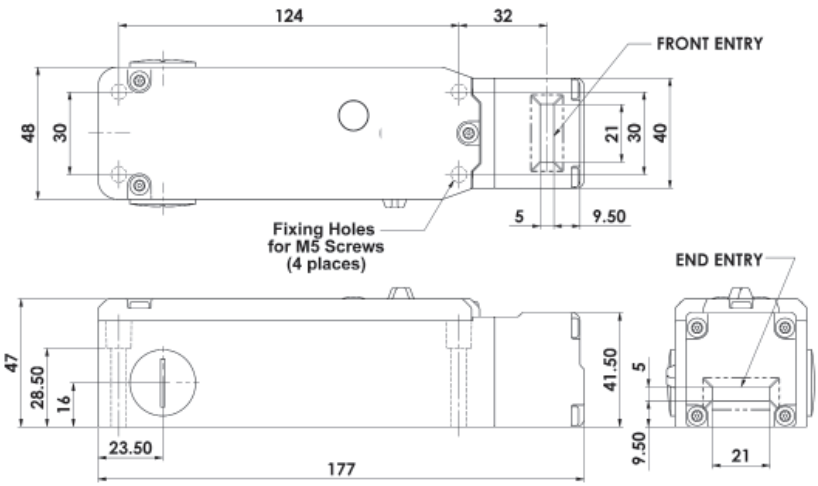

RELATED PRODUCTS & ACCESSORIES (see p70-75)

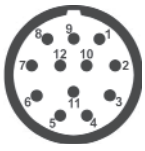



Quick Connect (QC) M23 12 Way Male Plug Connector Length 24mm Pin View from Switch	Switch Circuit
1 3	A1 A2
4 6	11/12
7 8	21/22
2 5	43/44
9	33
10	34
12	Earth

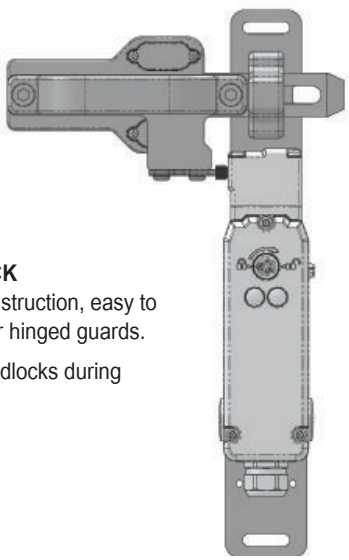

GATE BOLT LOCK
Rugged metal construction, easy to install on sliding or hinged guards.

Holes for fitting padlocks during maintenance.

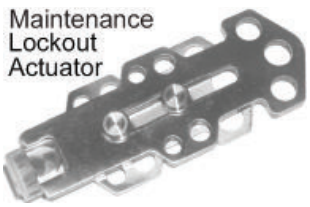

Fits to switch aperture during maintenance and provides multiple padlock holes.



FEMALE QC LEADS	LENGTH	SALES NUMBER
M23 12 Way	5m (15ft)	140143
M23 12 Way	10m (30ft)	140144

SALES NUMBER	SOLENOID VOLTAGE	M20	1/2" NPT	QC M23
Kobra KL3-SS-P2L	24V dc	205021	205022	205023
To order Switch with Actuator				
Kobra Actuator	Standard	Add A	to Sales Part Number	
Kobra Actuator	Flat	Add F	to Sales Part Number	
Kobra Actuator	Heavy Duty Flexible	Add HF	to Sales Part Number	
Kobra Actuator	S/Steel Heavy Duty Flexible	Add HFH	to Sales Part Number	
Stainless Steel Head Version		Add SS to Sales Part Number		