E20430

Connecting cable with socket

ADOGB030MSS0002E03

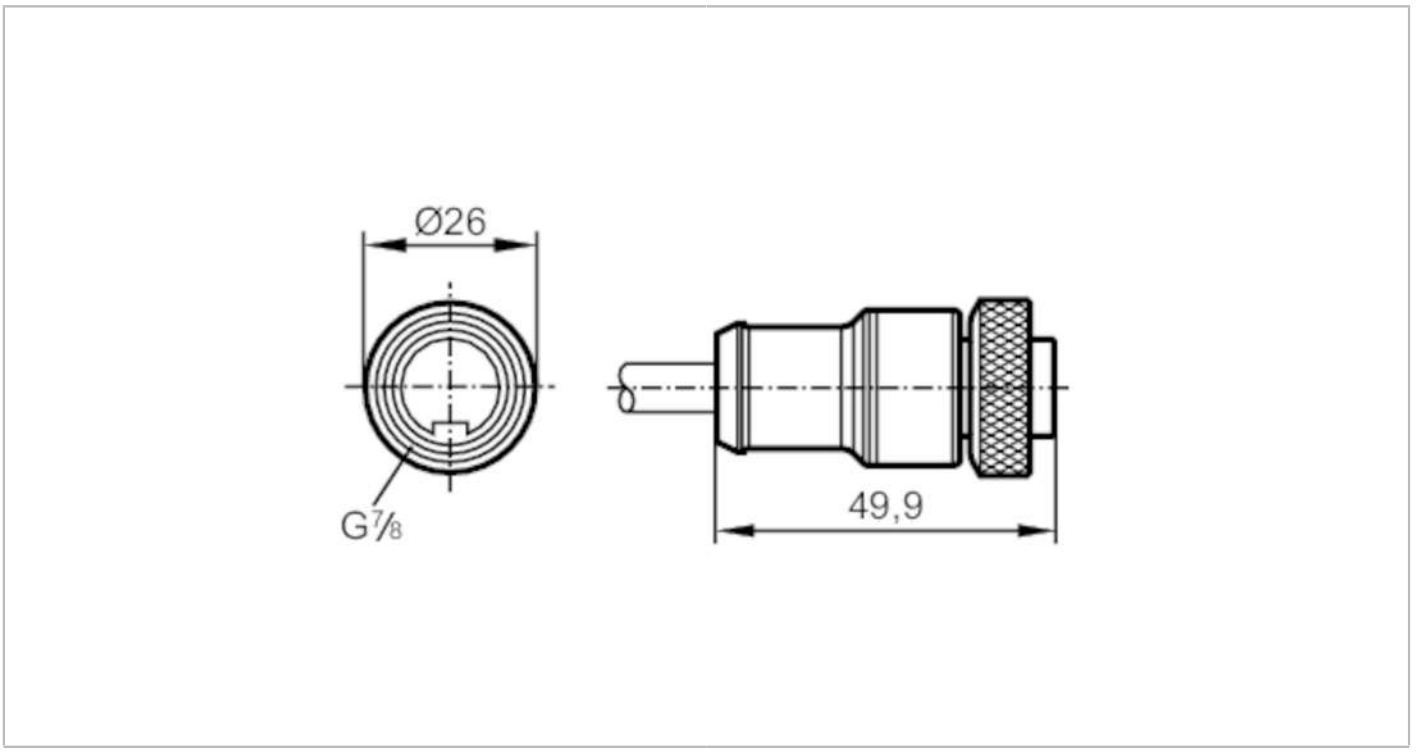

Electrical data		
Operating voltage	[V]	< 300 AC/DC
Operating conditions		
Ambient temperature	[°C]	-30...80
Ambient temperature (moving)	[°C]	-5...80
Protection		IP 68
Mechanical data		
Weight	[g]	117.5
Dimensions	[mm]	26 x 26 x 49.9
Moulded-body material		TPU
Material nut		diecast zinc
Remarks		
Pack quantity		1 pcs.
Electrical connection		
Cable: 2 m, PVC, black, Ø 5.4 mm; 3 x 0.5 mm²		
Electrical connection - socket		
Connector: 1 x 7/8", straight; Moulded body: TPU; Locking: diecast zinc		

E20430

Connecting cable with socket

ADOGB030MSS0002E03



Connection

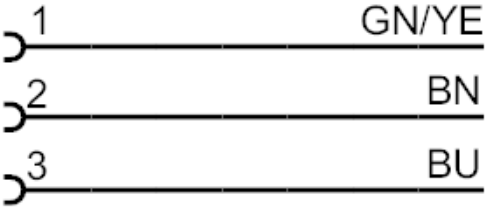

	Core colours :
BN =	brown
BU =	blue
GN/YE =	green/yellow