Brand of NTN corporation

Technical data

UCFCE216

Bearing units



Grey cast housing, radial insert ball bearing with socket set screws,seal with slinger

KIT CONTENT

UC216G2, FCE216

VISUAL (S)

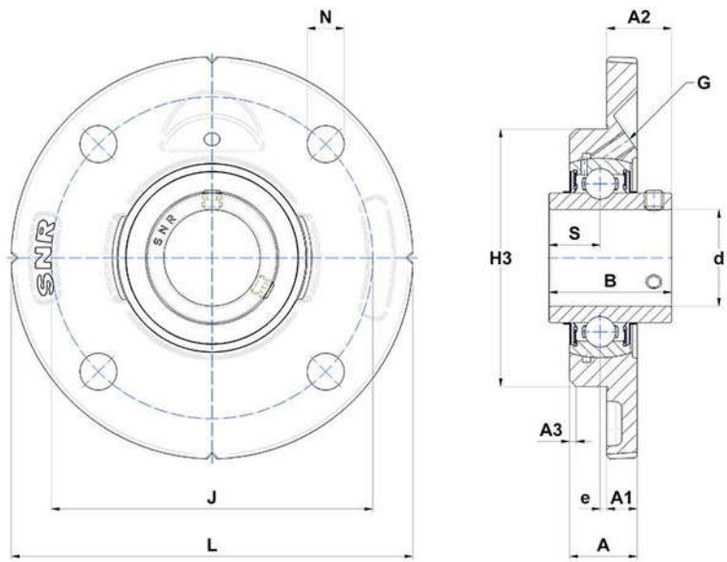

PRODUCT DEFINITION

Brand	SNR
A - Housing height	33 mm
A1 - Housing foot height / flange height	18,5 mm
A2 - Total height from mounting surface	51,3 mm
A3 - Centering depth / chamfer dimension	6 mm
B - Width of Inner Ring	82,6 mm

NTN Europe
1 rue des Usines · BP 2017 · 74010 Annecy Cedex · France · Tel. +33 (0)4 50 65 30 00
S.A. au capital de 322 639 919 € · RCS ANNECY B 325 821 072 · Id. Fiscale : FR 48 325 821 072
SIRET 325 821 072 00015 · Code APE 2815 Z · Code NACE 28.15

PRODUCT DEFINITION	
d - Shaft diameter	80 mm
e - Distance mounting surface to bearing center	2 mm
G - Grease fitting	R1/8"
H3 - Centering dia	160 mm
J - Mounting holes distance	184 mm
L - Housing width / diameter	220 mm
N - Mounting hole dimension	18 mm
S - Distance front side/bearing centre	33,3 mm

PRODUCT PERFORMANCE	
C - Dynamic load rating	72500000 mN
C0 - Static load rating	54200000 mN
Operating temperature min.	253,15 °K
Operating temperature max.	373,15 °K

OTHER FEATURES	
Mass	5,58 kg
Recommended tightening torque for set screw	33 N-m