EL-OEM-3

OEM Packaged Voltage Data Logger

FEATURES

- PCB Mounted (2.54mm pitch, header sockets)
- 0 to 2.4V d.c. Measurement Range
- Logging Rates between 1s and 12hr
- Stores 64,000 readings
- USB interface for set-up and data download (USB connector not included on module. Module not designed to be permanently connected to USB)
- User-programmable alarm thresholds
- EasyLog software available as a free download

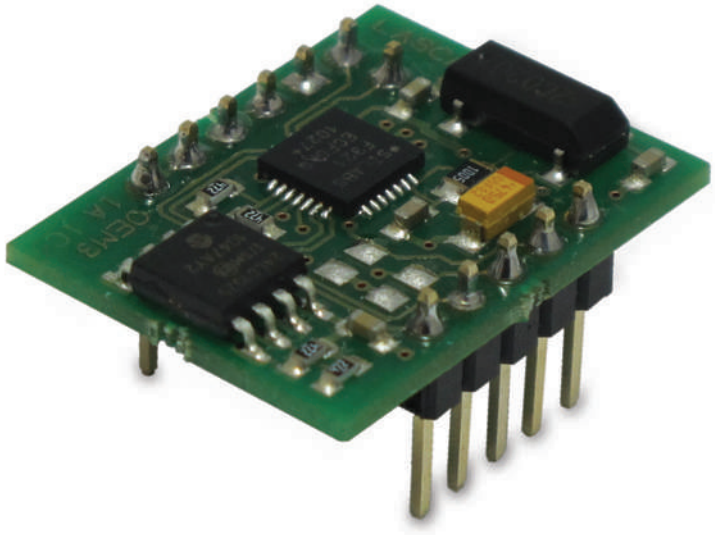

This component style data logger measures and stores up to 64,000 voltage readings over a 0 to 2.4V d.c. measurement range. It can be incorporated into new and existing products without the need to specifically develop a hardware and software platform.

The user can easily set up the logger and view downloaded data by plugging the data logger into a PC's USB port and using the available free downloadable EasyLog software. Data can then be graphed, printed and exported to other applications.

SPECIFICATIONS

Measurement range	0 to 2.4V d.c.
Internal resolution	2.4mV
Accuracy (overall error)	±1%
Logging rate	User selectable between 1 second & 12 hours
Supply voltage	2.75 to 3.6V
Operating current	0.01 to 3mA
Operating temperature range	-40 to 85°C (-40 to 185°F)

ACCESSORIES

EL-OEM-TEST

EL-OEM-3

OEM Packaged Voltage Data Logger

EL-WIN-USB

Lascar's EasyLog control software is available as a free download from www.easylogusb.com. Easy to install and use, the control software is compatible with 32-bit and 64-bit versions of Windows 7, 8 and 10. The software is used to set up the logger, download, graph and annotate data or export in Excel, PDF and jpeg formats.

The software allows the following parameters to be configured:

- Logger name
- Logging rate (customisable between 1 second and 12 hours)
- High and low alarms
- Immediate and delayed logging start

Download the latest version of the software free of charge from www.easylogusb.com

APPLICATION NOTES AND PIN FUNCTIONS

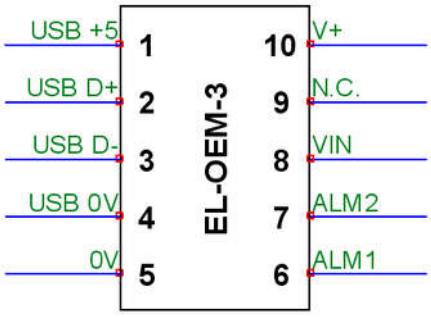

1. USB +5 +5V rail for USB interface
2. USB D+ Positive data line for USB interface
3. USB D- Negative data line for USB interface
4. USB 0V Ground rail for USB interface
5. 0V Module ground
6. ALM1 Logging status*
7. ALM2 Logging status*
8. VIN 0 – 2.4V d.c. signal input
9. N.C. Not Connected - do not connect to this pin
10. V+ Supply voltage input, suitable for voltages between 2.75V and 3.6V

*See the alarm section

EL-OEM-3

OEM Packaged Voltage Data Logger

POWER SUPPLY OPTIONS

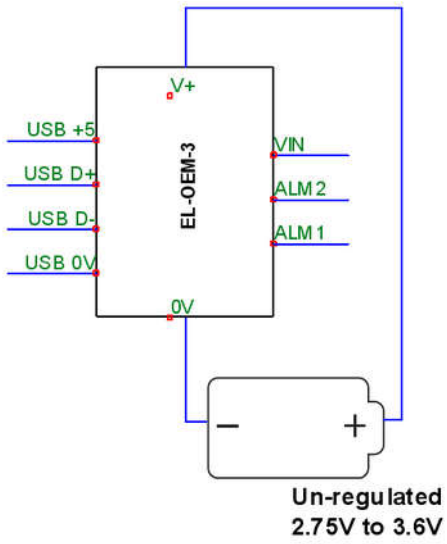

The logger is suitable for voltages between 2.75V and 3.6V. This can either be from a battery or using an external voltage regulator. If the voltage drops below 2.75V, the logger will reset to a stopped condition (i.e. in the event of a depleted battery).

ALARM/INDICATOR OUTPUT

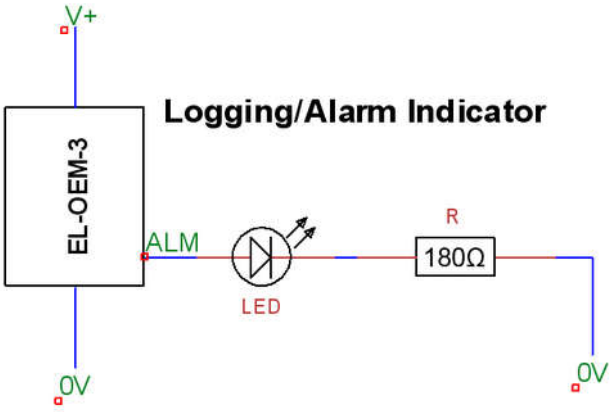

Maximum output current 10mA.

ALM1 shows logging status when the hardware isn't in an alarm condition.

ALM2 shows logging status when the hardware is in an alarm condition.

EL-OEM-3

OEM Packaged Voltage Data Logger

VOLTAGE INPUT

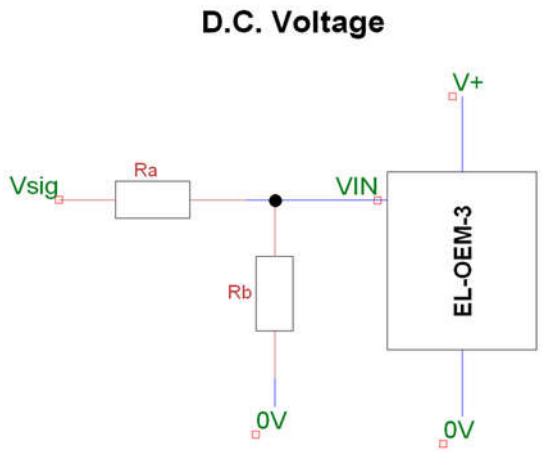

D.C. voltages of less than 2.4V can be measured using VIN directly.
Voltages greater than 2.4V require rescaling, as per the table below:

Required F.S.R.	Ra	Rb
5V	36K	30k
10V	51K	15k
30V	56K	4K7

Vsig can be connected to the positive supply rail and used to record the supply voltage.

DIMENSIONS

All dimensions in mm (inches)



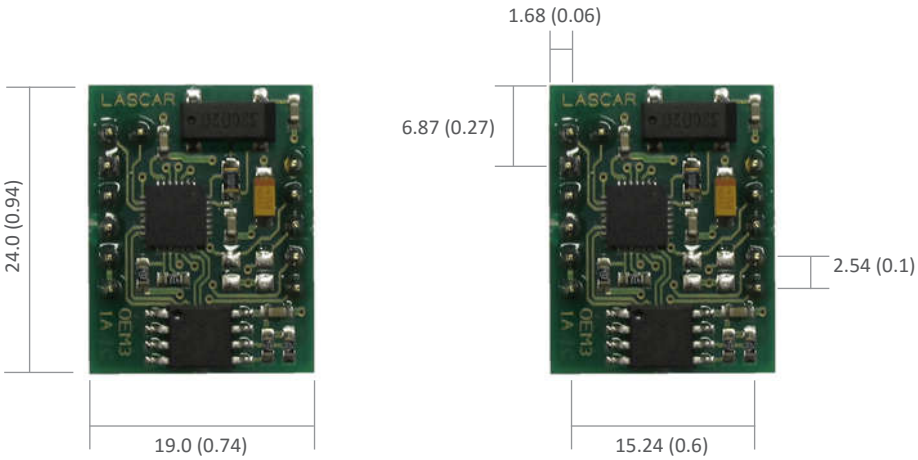

EL-OEM-3

OEM Packaged Voltage Data Logger

ALARM OUTPUT MODES

EL-OEM-3 features a two alarm outputs - ALM 1 and ALM 2.

By default hold is disabled. In this mode the ALM 1 will no longer continue to pulse after the logged reading has returned to normal from an alarm condition.

Hold can be turned on via the control software. In this mode ALM 1, that indicates an alarm condition, will continue to pulse even after the logged reading has returned to normal. This feature ensures that the user is notified that an alarm level has been exceeded, without the need to down-load the data from the logger.

	ALM 2	ALM 2 single pulse (10 seconds) The data logger is currently logging. No alarm.
	ALM 2	ALM 2 single pulse (20 seconds) The data logger is currently logging. No alarm. However, the battery is low and should be replaced before logging important data.
	ALM 2	ALM 2 single pulse (30 seconds) The data logger is not currently logging, but is primed to start at a later date and time (delayed start).
	ALM 2	ALM 2 double pulse (20 seconds) The data logger is full and has stopped logging. No alarm.
ALM 1		ALM 1 single pulse (10 seconds) The data logger is currently logging. Low alarm.
ALM 1		ALM 1 single pulse (20 seconds) The data logger is currently logging. Low alarm. However, the battery is low and should be replaced before logging important data.
ALM 1		ALM 1 double pulse (10 seconds) The data logger is currently logging. High alarm.
ALM 1		ALM 1 double pulse (20 seconds) The data logger is currently logging. High alarm. However, the battery is low and should be replaced before logging important data.
ALM 1	**ALM 2**	ALM 1/ ALM 2 single pulse (20 seconds) The data logger is full and has stopped logging. Alarm (high, low or both).
		No pulse The data logger is stopped, the battery is empty or there is no battery fitted.