AV13
Air Vent for Steam Systems
Installation and Maintenance Instructions

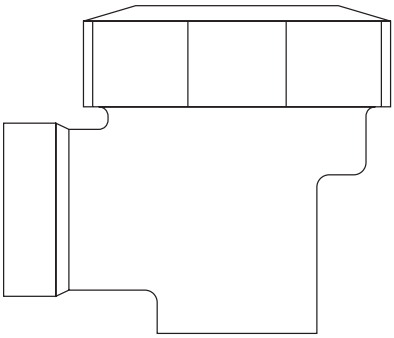

1. Safety information
2. General product information
3. Installation
4. Commissioning
5. Operation
6. Maintenance
7. Spare parts

© Copyright 2007
Printed in GB

1. Safety information

Safe operation of this unit can only be guaranteed if it is properly installed, commissioned, used and maintained by a qualified personnel (see Section 1.11) in compliance with the operating instructions. General installation and safety instructions for pipeline and plant construction, as well as the proper use of tools and safety equipment must also be complied with.

1.1 Intended use

Referring to the Installation and Maintenance Instructions, name-plate and Technical Information Sheet, check that the product is suitable for the intended use/application. This product complies with the requirements of the European Pressure Equipment Directive 97/23/EC and falls within category SEP and therefore does not carry the CE mark:

Product	Group 2 gases	Group 2 liquids
AV13	SEP	SEP

i) **The product has been specifically designed for use on steam, air or water/ condensate which are in Group 2 of the above mentioned Pressure Equipment Directive. The products use on other fluids may be possible but, if this is contemplated, Spirax Sarco should be contacted to confirm the suitability of the product for the application being considered.**

ii) **Check material suitability, pressure and temperature and their maximum and minimum values. If the maximum operating limits of the product are lower than those of the system in which it is being fitted, or if malfunction of the product could result in a dangerous overpressure or overtemperature occurrence, ensure a safety device is included in the system to prevent such over-limit situations.**

iii) **Determine the correct installation situation and direction of fluid flow.**

iv) **Spirax Sarco products are not intended to withstand external stresses that may beinduced by any system to which they are fitted. It is the responsibility of the installer to consider these stresses and take adequate precautions to minimise them.**

v) **Remove protection covers from all connections and protective film from all name-plates, where appropriate, before installation on steam or other high temperature applications.**

1.2 Access

Ensure safe access and if necessary a safe working platform (suitably guarded) before attempting to work on the product. Arrange suitable lifting gear if required.

1.3 Lighting

Ensure adequate lighting, particularly where detailed or intricate work is required.

1.4 Hazardous liquids or gases in the pipeline

Consider what is in the pipeline or what may have been in the pipeline at some previous time. Consider; flammable materials, substances hazardous to health, extremes of temperature.

1.5 Hazardous environment around the product

Consider; explosion risk areas, lack of oxygen (e.g. tanks, pits), dangerous gases, extremes of temperature, hot surfaces, fire hazard (e.g. during welding), excessive noise, moving machinery.

1.6 The system

Consider the effect on the complete system of the work proposed. Will any proposed action (e.g. closing isolation valves, electrical isolation) put any other part of the system or any personnel at risk?
Dangers might include isolation of vents or protective devices or the rendering ineffective of controls or alarms. Ensure isolation valves are turned on and off in a gradual way to avoid system shocks.

1.7 Pressure systems

Ensure that any pressure is isolated and safely vented to atmospheric pressure. Consider double isolation (double block and bleed) and the locking or labelling of closed valves. Do not assume that the system has depressurised even when the pressure gauge indicates zero.

1.8 Temperature

Allow time for temperature to normalise after isolation to avoid danger of burns.

If the 'O' ring has been subjected to a temperature approaching 315 °C (599 °F) or higher, it may have decomposed and formed hydroflouric acid. Avoid skin contact and inhalation of any fumes as the acid will cause deep skin burns and damage the respiratory system.

1.9 Tools and consumables

Before starting work ensure that you have suitable tools and/or consumables available. Use only genuine Spirax Sarco replacement parts.

1.10 Protective clothing

Consider whether any protective clothing is required by yourself and/or others in the vicinity to protect against the hazards of, for example, chemicals, high/low temperature, radiation, noise, falling objects, and dangers to eyes and face.

1.11 Permits to work

All work must be carried out or be supervised by a suitably competent person.
Installation and operating personnel should be trained in the correct use of the product according to these instructions.
Where a formal 'permit to work' system is in force it must be complied with. Where there is no such system, it is recommended that a responsible person should know what work is going on and, where necessary, arrange to have an assistant whose primary responsibility is safety.
Post 'warning notices' if necessary.

1.12 Handling

Manual handling of Spirax-Sarco products may present a risk of injury. Lifting, pushing, pulling, carrying or supporting a load by bodily force can cause injury particularly to the back. You are advised to assess the risks taking into account the task, the individual, the load and the working environment and use the appropriate handling method depending on the circumstances of the work being done.

1.13 Residual hazards

In normal use the external surface of the product may be very hot. If used at the maximum permitted operating conditions the surface temperature of some products may reach temperatures in excess of 250 °C (482 °F).
This product is not self-draining. Take due care when dismantling or removing the product from an installation (refer to 'Maintenance instructions').

1.14 Freezing

Provision must be made to protect products which are not self-draining against frost damage in environments where they may be exposed to temperatures below freezing point.

1.15 Disposal

Apart from the 'O' ring this product is recyclable and no ecological hazard is anticipated with its disposal providing due care is taken.
If the recycling process involves a temperature approaching 315 °C caution is advised regarding decomposition of the fluorocarbon rubber 'O' ring (see Section 1.8).

'O' ring:

- **Can be landfilled, when in compliance with National and Local regulations.**
- **Can be incinerated, but a scrubber must be used to remove Hydrogen Fluoride, which is evolved from the product and with compliance to National and Local regulations.**
- **Is insoluble in aquatic media.**

1.16 Returning products

Customers and stockists are reminded that under UK and EC Health, Safety and Environment Law, when returning products to Spirax Sarco they must provide information on any hazards and the precautions to be taken due to contamination residues or mechanical damage which may present a health, safety or environmental risk. This information must be provided in writing including Health and safety data sheets relating to any substances identified as hazardous or potentially hazardous.

2. General product information

2.1 Description

The AV13 is a brass bodied maintainable balanced pressure thermostatic air vent for steam systems.

Standards

The product fully complies with the requirements of the European Pressure Equipment Directive 97/23/EC.

Certification

The product is available with a manufacturers' Typical Test Report. Note: All certification/ inspection requirements must be stated at the time of order placement.

Note: For further product data see the Technical Information Sheet TI-P010-02.

2.2 Sizes and pipe connections

⅜", ½" and ¾" screwed BSP (BS 21 parallel) or NPT.

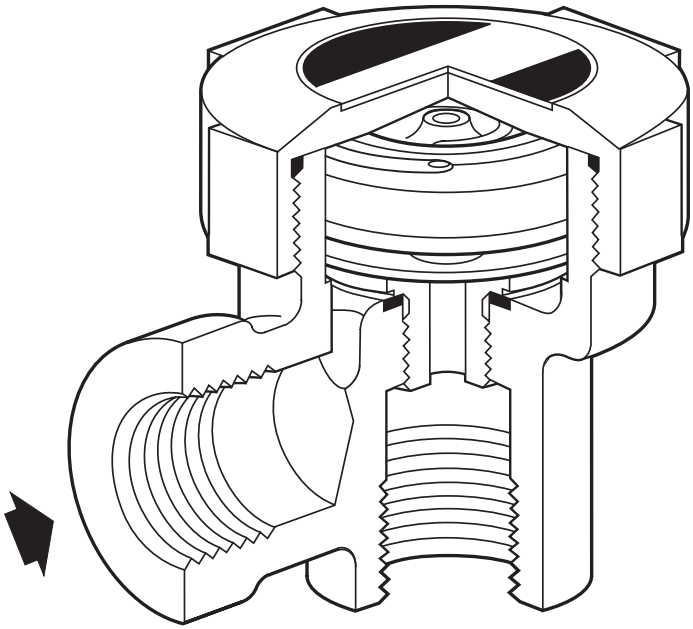

Fig. 1

2.3 Pressure/temperature limits

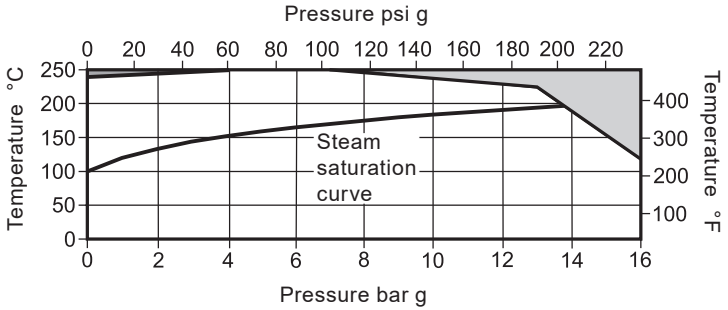

The product **must not** be used in this region.

The product should not be used in this region or beyond its operating range as damage to the internals may occur.

Body design conditions			PN16
PMA	Maximum allowable pressure	16 bar g @ 120 °C	(232 psi g @ 248 °F)
TMA	Maximum allowable temperature	250 °C @ 7 bar g	(482 °F @ 102 psi g)
Minimum allowable temperature		-20 °C	(-4 °F)
PMO	Maximum operating pressure	13 bar g @ 220 °C	(189 psi g @ 428 psi g)
TMO	Maximum operating temperature	250 °C @ 7 bar g	(482 °F @ 102 psi g)
Minimum operating temperature		0 °C	(32 °F)
Designed for a maximum cold hydraulic test pressure of:		24 bar g	(348 psi g)

3. Installation

Note: Before actioning any installation observe the 'Safety information' in Section 1.

Referring to the Installation and Maintenance Instructions, name-plate and Technical Information Sheet, check that the product is suitable for the intended installation:

3.1 Check materials, pressure and temperature and their maximum values. If the maximum operating limit of the product is lower than that of the system in which it is being fitted, ensure that a safety device is included in the system to prevent overpressurisation.

3.2 Determine the correct installation situation and the direction of fluid flow.

3.3 Remove protection covers from all connections and protective film from all name-plates, where appropriate, before installation on steam or other high temperature applications.

3.4 The AV13 should be installed with the capsule in a horizontal plane with the cap at the top and be positioned at the highest point of the main, or plant, where the air collects. For maximum removal of the air, the discharge should be as free as possible and piped to a safe location.

3.5 Isolation valves must be installed to allow for safe maintenance and trap replacement.

3.6 Open isolation valves slowly until normal operating conditions are achieved.

3.7 Check for leaks and correct operation.

3.8 Ensure adequate space is left to remove the cover from the body for maintenance. Minimum withdrawal distance for the cover is 55 mm.

Note: If the AV13 is to discharge to atmosphere ensure it is a safe place, the discharging fluid may be at a temperature of 100 °C (212 °F).

4. Commissioning

After installation or maintenance ensure that the system is fully functional. Carry out tests on any alarms or protective devices.

5. Operation

The operating element is a capsule containing a small quantity of a special liquid with a boiling point below that of water. In the cold conditions that exist at start-up, the capsule is relaxed. The valve is off its seat and is wide open, allowing unrestricted removal of air. This is a feature of all balanced pressure traps and explains why they are well suited to air venting.

6. Maintenance

Note:
Before actioning any maintenance programme observe the 'Safety information' in Section 1.

6.1 General information

Before undertaking any maintenance on the AV13 it must be isolated from the supply line and return line and any pressure allowed to safely normalise to atmosphere. The AV13 should then be allowed to cool. When reassembling, ensure that all joint faces are clean. Maintenance can be completed with the AV13 in the pipeline, once the safety procedures have been observed. It is recommended that new gaskets and spares are used whenever maintenance is undertaken. Ensure that the correct tools and necessary protective equipment are used at all times. When maintenance is complete open the isolation valves slowly and check for leaks.

6.2 How to fit a new capsule and seat:

- Remove the cap (**2**) using a spanner.
- Lift out the spring (**5**), capsule (**4**) and spacer plate (**6**).
- Unscrew the valve seat (**7**).
- Remove the seat gasket (**8**).
- Fit a new seat gasket (**8**).
- Screw in a new valve seat (**7**). Use a small amount of anti-seize compound on the threads and tighten to the recommended torque (see Table 1).
- Drop in the new spacer plate (**6**) ensuring it is located centrally on the valve seat (**7**). **Note:** Early spacer plates are unidirectional and must be fitted with the highest points uppermost (see Figure 2). This does not apply to later models, which can be fitted either way up.
- Fit new capsule (**4**) and spring (**5**) ensuring that the conical spring is positioned with the narrow end pointing downwards in contact with the capsule.
- Screw on the cap (**2**) using a new 'O' ring (**3**) assembled into the groove in the top of the cap, or in older models using a new gasket. Note: The spares pack contains 2 sizes of 'O' ring, use of the correct 'O' ring is explained in the note contalned within the package. Tighten to the recommended torque (see Table 1).

Fig. 2 Old style spacer plate

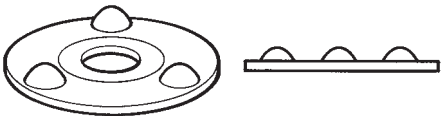

Table 1 Recommended tightening torques

Item	Part	or mm	N m	(lbf ft)
2	Gasket	50 A/F	90 - 100	(66 - 74)
	'O' ring	50 A/F	50 - 60	(37 - 44)
7	Seat	17 A/F	35 - 40	(26 - 29)

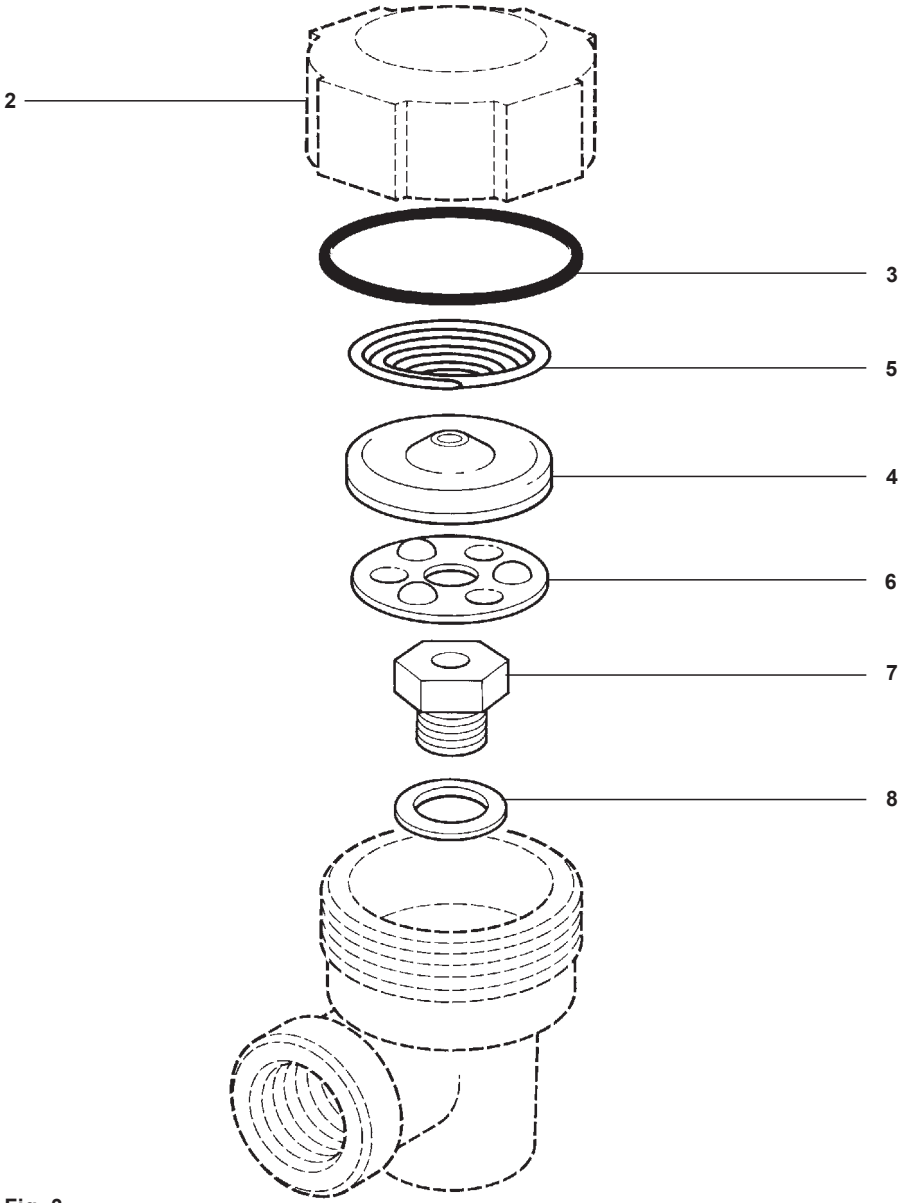

Fig. 3

7. Spare parts

The spare parts available are shown in solid outline. Parts drawn in broken line are not supplied as spares.

Available spares

Maintenance kit			**3, 4, 5, 6, 7, 8**
Cap gasket	(earlier models)	(packet of 3)	**3**
'O' ring	(current models)	(packet of 3)	**3**

Note: Earlier models were fitted with conventional gaskets. Current models are fitted with an 'O' ring to seal the cap. There are two types of 'O' ring. The 'O' ring used is dependent on the body type.

How to order spares

Always order spares by using the description given in the column headed 'Available spares' and state the size and type of air vent.

Example: 1 - Capsule and seat assembly for a ½" Spirax Sarco AV13 balanced pressure thermostatic air vent.

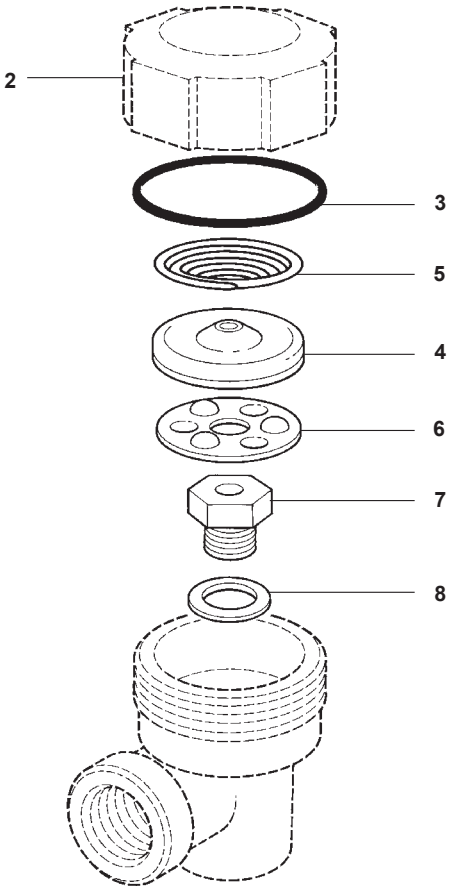

Fig. 4