# E/P pressure regulator, Series ED02

- Qn = 120 l/min
- Compressed air connection output G 1/8, 1/8 NPT
- Electr. connection via signal connection
- Signal connection input and output, Plug, M12, 5-pin




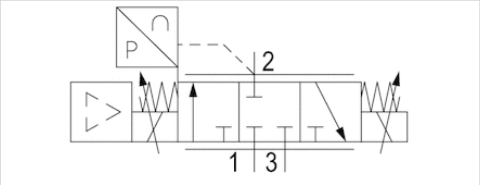


| | |
|---|---|
| Type | Poppet valve |
| Mounting orientation | ±α = 0 ... 90° ±β = 0 ... 90° |
| Certificates | CE declaration of conformity |
| Working pressure max | See table below |
| Ambient temperature min./max. | 0 ... 50 °C |
| Medium temperature min./max. | 0 ... 50 °C |
| Compressed air connection input | G 1/8 1/8 NPT |
| Compressed air connection output | G 1/8, 1/8 NPT |
| Medium | Compressed air |
| Max. particle size | 50 µm |
| Oil content of compressed air | 1 mg/m³ |
| Nominal flow Qn | 120 l/min |
| Control | Analog |
| DC operating voltage | 24 V |
| Voltage tolerance DC | -20% / +20% |
| Permissible ripple | 5% |
| Max. power consumption | 300 mA |
| Protection class | IP65 |
| Weight | 0,32 kg |
| | Nominal flow Qn with working pressure 7 bar , with secondary pressure 6 bar and Δp = 0.2 bar |

## Technical data

| Part No. | Working pressure max | Pressure setting range min./max. | Nominal input value |
|---|---|---|---|
| | | | Min./max. |
| R414001197 | - | 0 ... -1 bar | 0 ... 10 V |
| R414001198 | 1,5 bar | -1 ... 1 bar | 0 ... 20 mA |
| R414001199 | 1,5 bar | -1 ... 1 bar | 4 ... 20 mA |
| R414001200 | 1,5 bar | -1 ... 1 bar | 0 ... 10 V |
| R414002405 | 0,7 bar | 0 ... 0,3 bar | 0 ... 20 mA |
| R414002406 | 0,7 bar | 0 ... 0,3 bar | 4 ... 20 mA |
| R414002407 | 0,7 bar | 0 ... 0,3 bar | 0 ... 10 V |
| R414002408 | 0,7 bar | 0 ... 0,3 bar | 0 ... 10 V |
| R414003364 | 3 bar | 0 ... 1 bar | 0 ... 20 mA |
| R414003365 | 3 bar | 0 ... 1 bar | 4 ... 20 mA |
| R414004660 | 3 bar | 0 ... 1 bar | 0 ... 10 V |
| R414003879 | 3 bar | 0 ... 1 bar | 0 ... 10 V |
| R414003370 | 7 bar | 0 ... 2 bar | 0 ... 20 mA |
| R414003371 | 7 bar | 0 ... 2 bar | 4 ... 20 mA |
| R414003372 | 7 bar | 0 ... 2 bar | 0 ... 10 V |
| R414003373 | 7 bar | 0 ... 2 bar | 0 ... 10 V |

| Part No. | Working pressure max | Pressure setting range min./max. | Nominal input value |
|---|---|---|---|
| | | | Min./max. |
| R414002400 | 8 bar | 0 ... 6 bar | 0 ... 20 mA |
| R414002401 | 8 bar | 0 ... 6 bar | 4 ... 20 mA |
| R414002402 | 8 bar | 0 ... 6 bar | 0 ... 10 V |
| R414002403 | 8 bar | 0 ... 6 bar | 0 ... 10 V |
| R414002410 | 12 bar | 0 ... 10 bar | 0 ... 20 mA |
| R414002411 | 12 bar | 0 ... 10 bar | 4 ... 20 mA |
| R414002412 | 12 bar | 0 ... 10 bar | 0 ... 10 V |
| R414002413 | 12 bar | 0 ... 10 bar | 0 ... 10 V |

| Part No. | Actual output value | Control | Hysteresis | Fig. | |
|---|---|---|---|---|---|
| | Min./max. | | | | |
| R414001197 | 0 ... 10 V | Analog | 0.01 bar | Fig. 2 | - |
| R414001198 | 0 ... 20 mA | Analog | 0.02 bar | Fig. 1 | - |
| R414001199 | 4 ... 20 mA | Analog | 0.02 bar | Fig. 1 | - |
| R414001200 | 0 ... 10 V | Analog | 0.02 bar | Fig. 2 | - |
| R414002405 | 0 ... 20 mA | Analog | 0.003 bar | Fig. 1 | - |
| R414002406 | 4 ... 20 mA | Analog | 0.003 bar | Fig. 1 | - |
| R414002407 | 10 V | Analog | 0.003 bar | Fig. 3 | 1) |
| R414002408 | 0 ... 10 V | Analog | 0.003 bar | Fig. 2 | - |
| R414003364 | 0 ... 20 mA | Analog | 0.01 bar | Fig. 1 | - |
| R414003365 | 4 ... 20 mA | Analog | 0.01 bar | Fig. 1 | - |
| R414004660 | 10 V | Analog | 0.01 bar | Fig. 3 | 1) |
| R414003879 | 0 ... 10 V | Analog | 0.01 bar | Fig. 2 | - |
| R414003370 | 0 ... 20 mA | Analog | 0.025 bar | Fig. 1 | - |
| R414003371 | 4 ... 20 mA | Analog | 0.025 bar | Fig. 1 | - |
| R414003372 | 10 V | Analog | 0.025 bar | Fig. 3 | 1) |
| R414003373 | 0 ... 10 V | Analog | 0.025 bar | Fig. 2 | - |
| R414002400 | 0 ... 20 mA | Analog | 0.05 bar | Fig. 1 | - |
| R414002401 | 4 ... 20 mA | Analog | 0.05 bar | Fig. 1 | - |
| R414002402 | - | Analog | 0.05 bar | Fig. 3 | 1) |
| R414002403 | 0 ... 10 V | Analog | 0.05 bar | Fig. 2 | - |
| R414002410 | 0 ... 20 mA | Analog | 0.05 bar | Fig. 1 | - |
| R414002411 | 4 ... 20 mA | Analog | 0.05 bar | Fig. 1 | - |
| R414002412 | - | Analog | 0.05 bar | Fig. 3 | 1) |
| R414002413 | 0 ... 10 V | Analog | 0.05 bar | Fig. 2 | - |

Minimum working pressure = 0.5 bar + max. required secondary pressure, Additional pressure setting ranges available on request

1) Output 10V constant to supply a set point potentiometer.

## Technical information

The min. control pressure must be adhered to, since otherwise faulty switching and valve failure may result!
The pressure dew point must be at least 15 °C under ambient and medium temperature and may not exceed 3 °C .
The oil content of compressed air must remain constant during the life cycle.
Use only the approved oils from AVENTICS. Further information can be found in the “Technical information” document (available in the MediaCentre).

With oil-free, dry air, other installation positions are possible on request.
ED02 series valves can be assembled into blocks using tie rods (see accessories).
The protection class is only ensured when the plug is mounted properly. For detailed information, see operating instructions.
The compressed air connection threads fit both G 1/8 and 1/8 NPTF.

## Technical information

| Material | |
|---|---|
| Housing | Die-cast aluminum Steel |
| Seals | Hydrogenated acrylonitrile butadiene rubber |

# Dimensions

## Dimensions

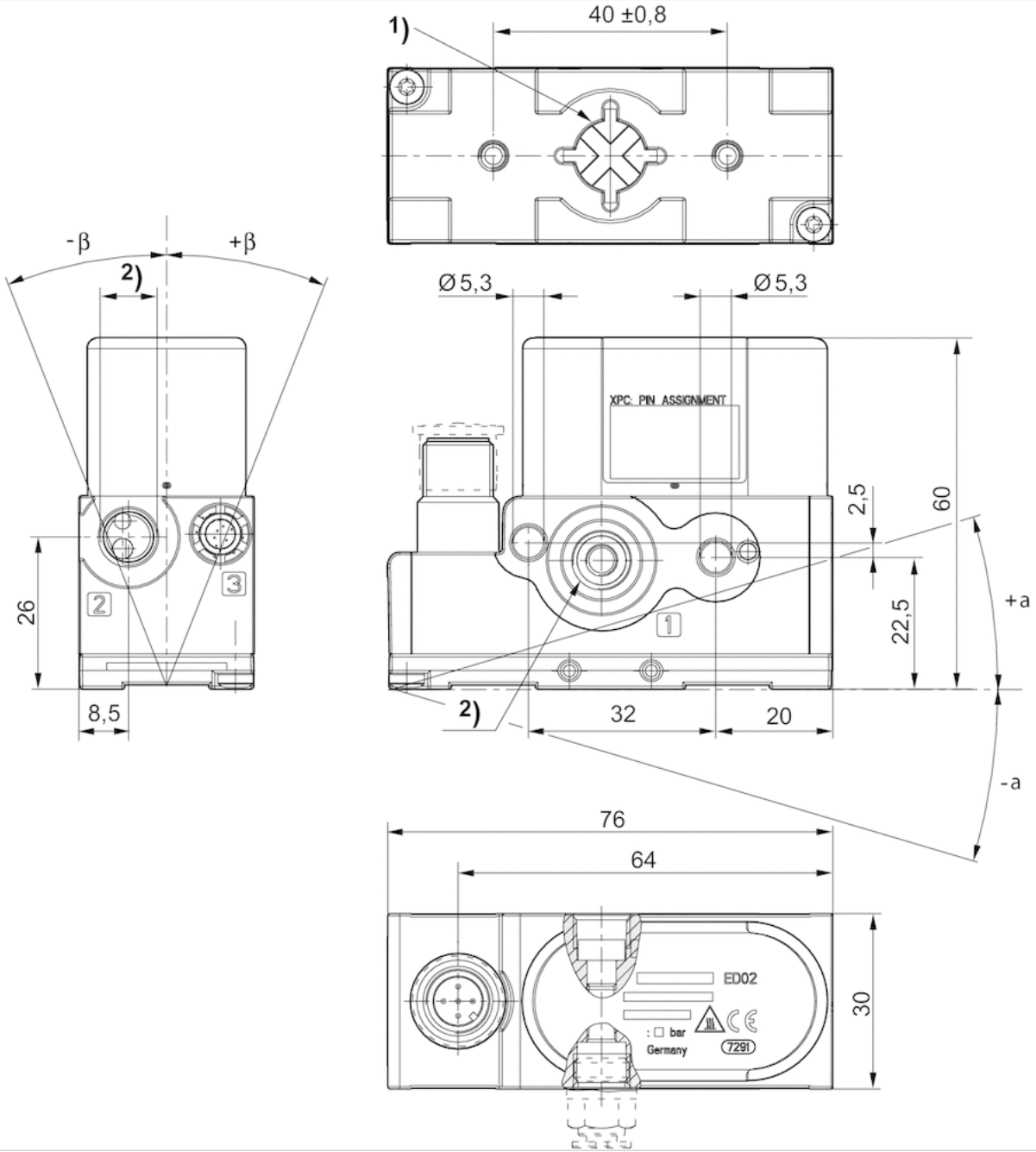


1) Housing exhaust
2) Universal threaded connection, suitable for G1/8 according to ISO 228/1:2000 and 1/8-27 NPTF

## Diagrams

### Flow diagram for pressure range up to 2 bar

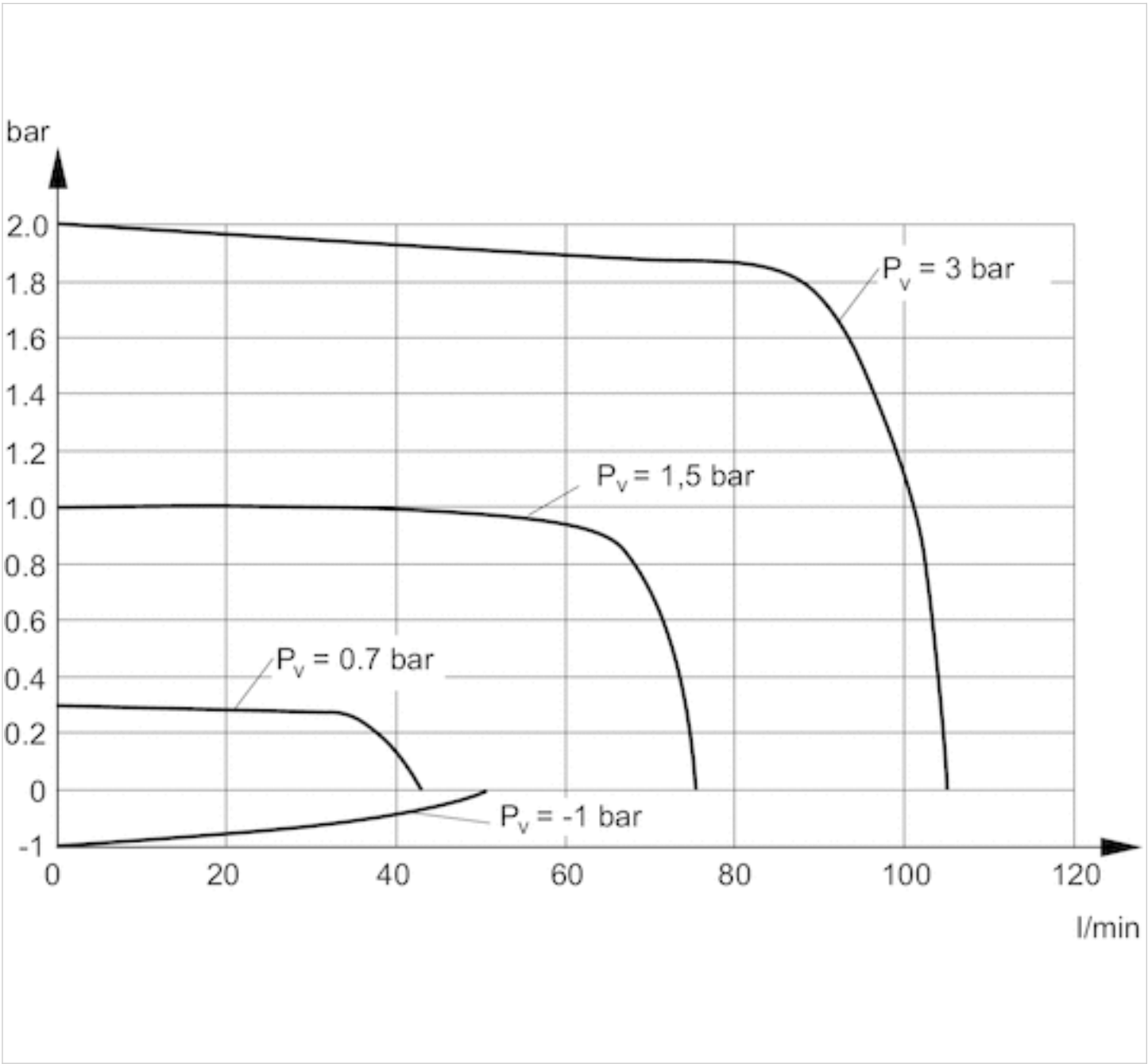


Pv = Supply pressure

## Durchflussdiagramm für Druckbereich bis 10 bar

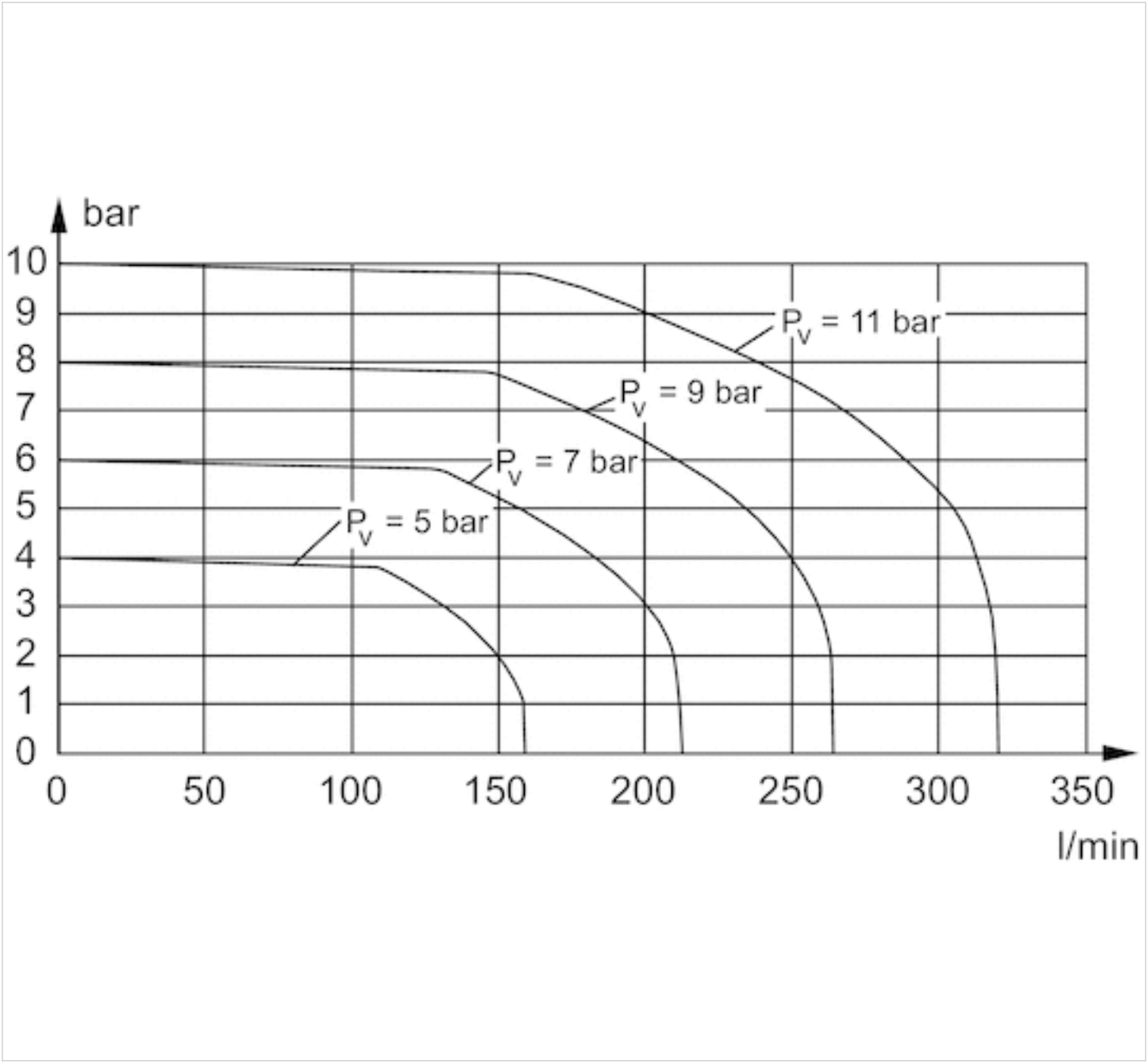


Pv = Supply pressure

# Circuit diagram

## Functional diagram

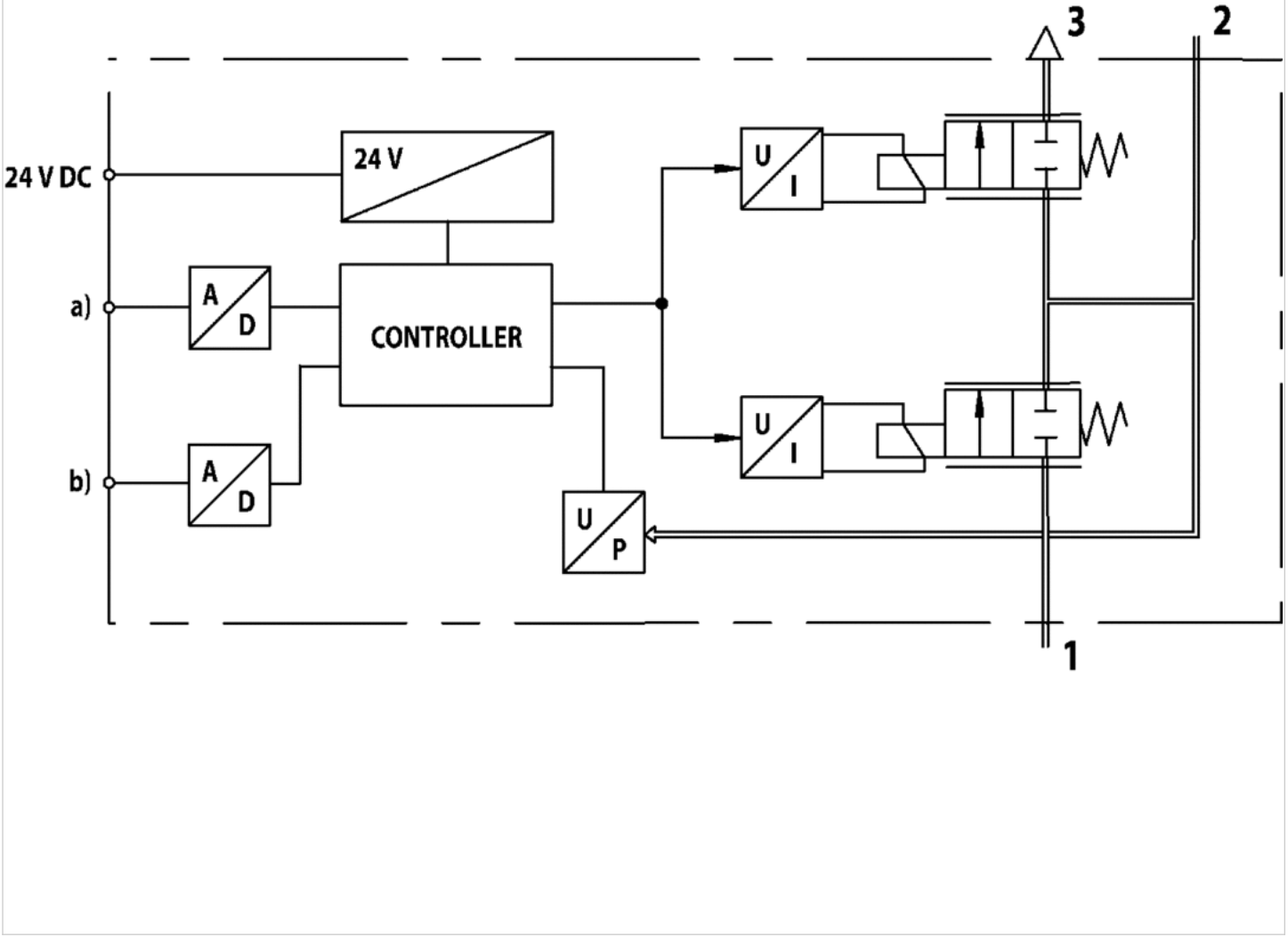


a) Nominal input value b) Actual output value
The E/P pressure control valve modulates the pressure corresponding to an analog electrical nominal input value.
1) Operating pressure
2) Working pressure
3) Exhaust

## Fig. 1, Characteristic and pin assignment for current control with actual output value

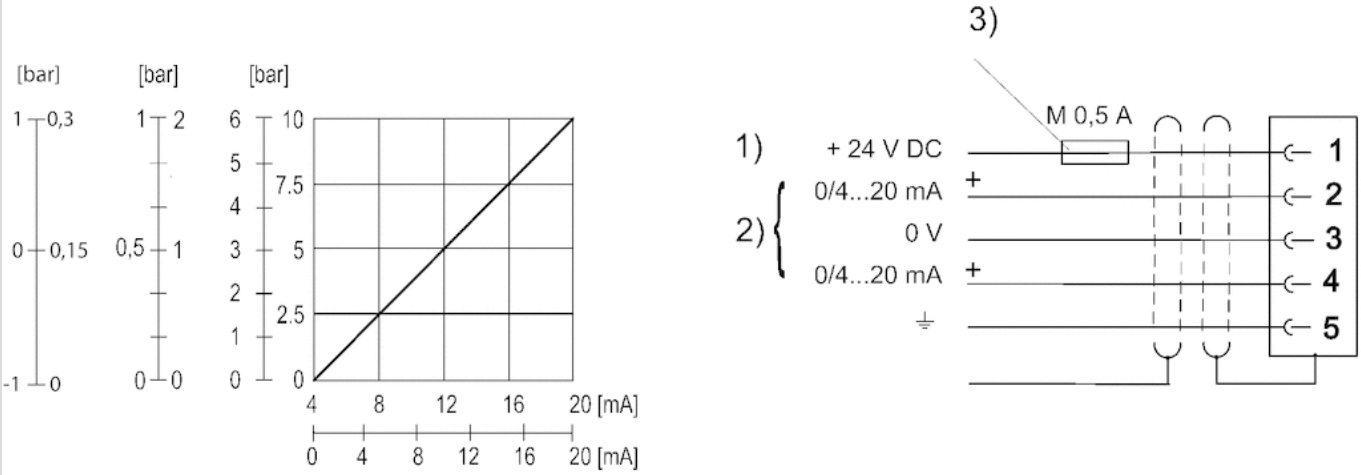


1) Supply Voltage
2) Actual value (pin 4) and nominal value (pin 2) are related to 0 V.
Current control (ohmic load 100 Ω). Actual value output (max. total resistance of downstream devices 500 Ω).
3) The operating voltage must be protected by an external M 0.5 A fuse.
Connect the plug via a shielded cable to ensure EMC.

## Fig. 2, Characteristic and pin assignment for voltage control with actual output value

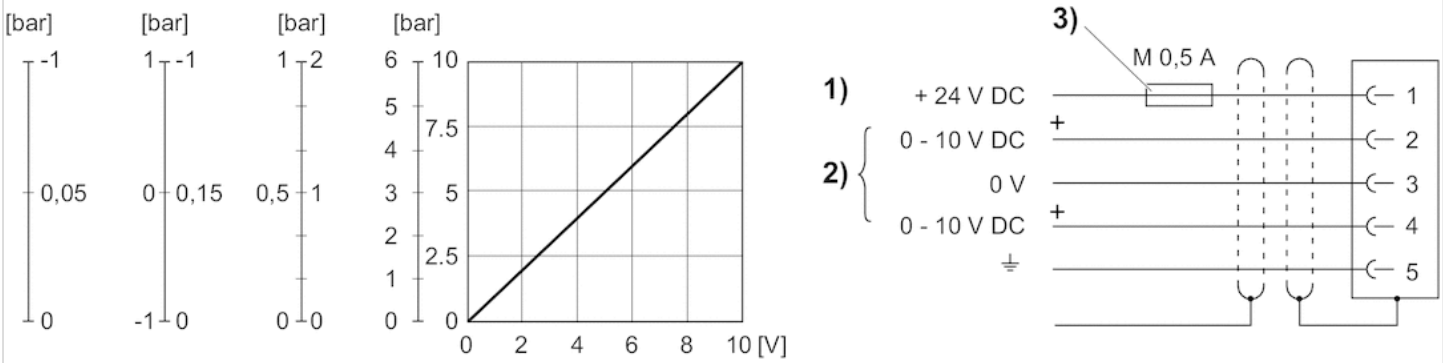


1) Supply voltage 2) Actual value (pin 4) and nominal value (pin 2) are related to 0 V.
Min. load resistance of nominal value output = 1 kΩ.
3) The operating voltage must be protected by an external M 0.5 A fuse.
Connect the plug via a shielded cable to ensure EMC.

## Fig. 3, Characteristic and pin assignment for potentiometer control without actual output value

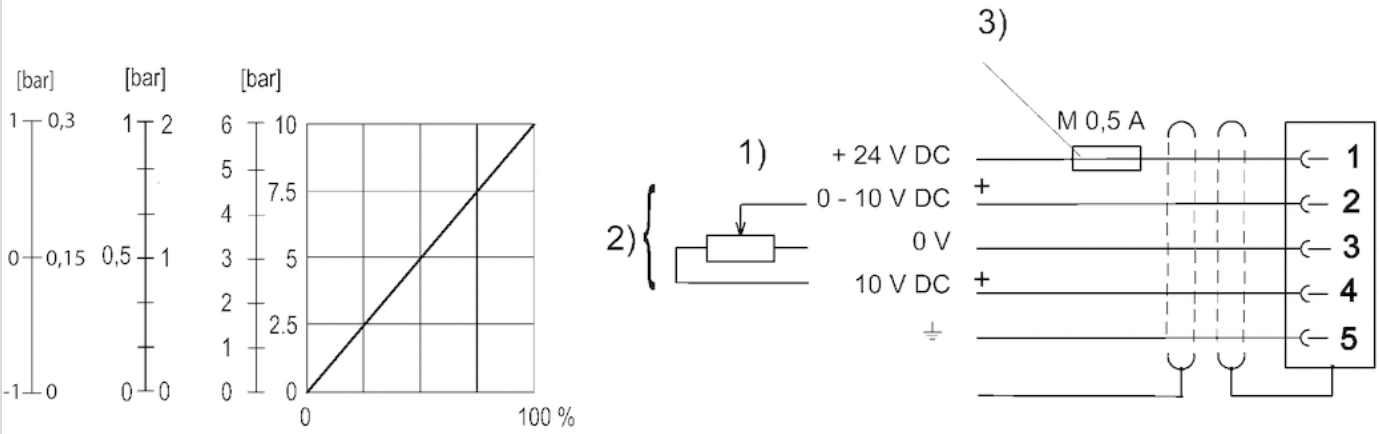


1) Supply voltage
2) Potentiometer supply (pin 4) and nominal value (pin 2) are related to 0 V.
Potentiometer resistance min. 0-2 kΩ, max. 0-10 kΩ.
3) The operating voltage must be protected by an external M 0.5 A fuse.
Connect the plug via a shielded cable to ensure EMC.