trumeter
innovation by design



732 Series

Electromechanical Hour Meter

EVALUATION KIT AVAILABLE
Contact us to request yours



Available with stainless steel bezel

The Model 732 provides a DC Hour Meter with an operating range of 10-80VDC. Models are protected for 2 times battery voltage and/or reverse polarity. Models are available in the standard industry housings, 3-Hole Round, Flush-Rectangular, Flush-Round and 2-Hole Rectangular. A Stirrup and Cup mount are available for applications where high shock and vibration exist. Its quartz time base insures accurate long-term time keeping. The totally sealed case protects against the environment and provides years of reliable service. Most models are IP66 and NEMA 4X, 12 rated when mounted with optional gasket.

Key Features

- Operating voltage 10-80VDC
- Totally Sealed
- UL/cUL Recognized, CE, UKCA & RoHS Compliant
- 6 Figure, 99999.9
- Quartz accuracy
- Options include:
  - Wire leads
  - Gasket kit (for IP66 and NEMA 4X, 12 rating)
  - Custom lens
  - Terminals up, down, straight

Applications

- Material Handling
- Farming Equipment
- Outdoor Power Equipment
- Construction Equipment
- Utility Vehicles

trumeter
innovation by design

Specification

Figures	6 - digits, 0.14” [3.6mm] 99999.9 Hours and indicator - white on black Decimal - black on white
Reset	Non-reset
Voltage	10-80VDC
Power	1 watt max.
Mount	Clip, mounting holes, Cup, or Stirrup
Terminations	1/4” [6.3mm] spade terminals
Weight	~2 oz [57 g]
Accuracy	± 0.02% over entire range
Bezel	Stirrup and Cup mount have metallic bezels
Case Material	Black polymer
Lens Material	Cup & Stirrup - glass All other models - polymer
Transient Protection	± 6 times normal for 300msec
Approvals	UL/cUL Recognized, CE, UKCA, SAE, & RoHS Compliant. All models are IP66 and NEMA 4X, 12 Compliant except the Cup and Stirrup mount
Overvoltage & Reverse Polarity	Protected for 2 times battery voltage and/or reverse polarity
Environmental	Totally Sealed
Front Panel	IP66 and NEMA 4X, 12 rated with optional gasket
Temp. Range	-40°F to +185°F [-40°C to + 85°C]
Humidity	95% (SAE J1378)
Vibration	10-80 Hz. 20g max. (SAE J1378)
Shock	55g @ 9 - 13msec (SAE J1378)

Industry standard quartz timing: The 722 series hour meter uses a quartz crystal oscillator that generates an impulse every 36 seconds or 0.01 of an hour.

Dimensions

2-Hole

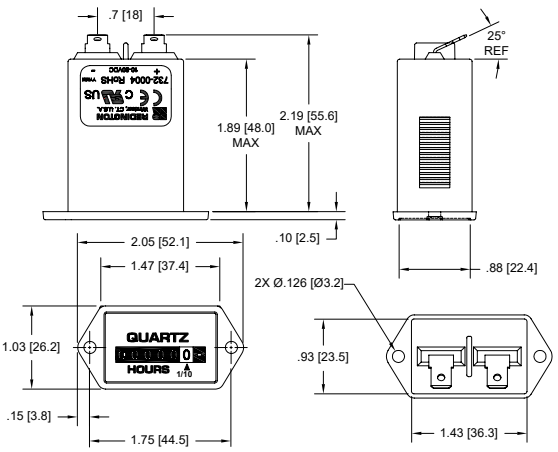

Panel Opening: 1.45” X 0.95” [36.8 X 24.1]
Recommended cut out hole size: 0.15 [3.8mm]

Flush-Rectangular

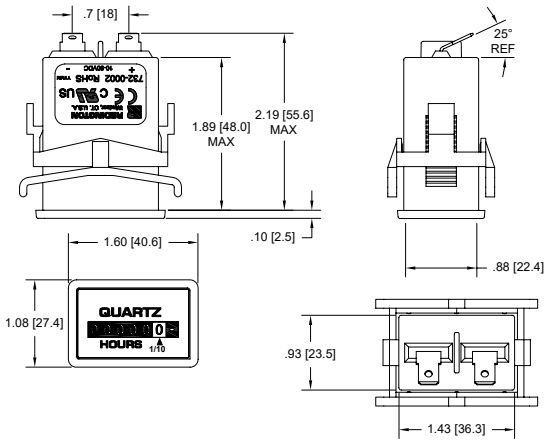

Panel Opening: 1.45” X 0.95” [36.8 X 24.1]
Maximum Panel Thickness: 0.03 to 0.63 [0.76 to 16.00]

trumeter
innovation by design

Flush-Round

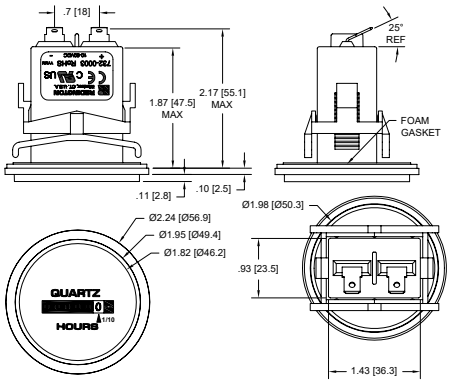

Panel Opening: 2.0" [50.6]
Maximum Panel Thickness: 0.40 [10.2]

3-Hole Round

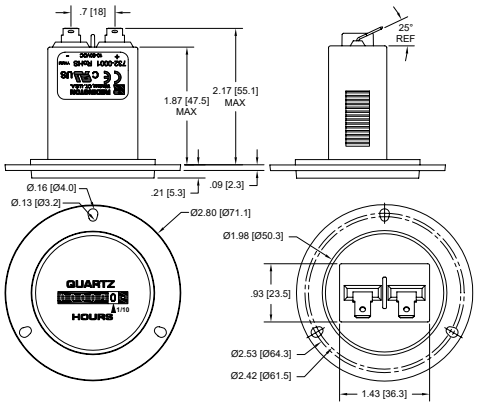

Panel Opening: 2.0" [50.6]

Cup

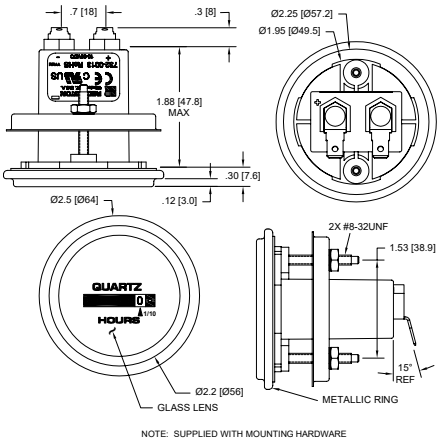

NOTE: SUPPLIED WITH MOUNTING HARDWARE

Panel Opening: 2.0" [50.6]

Stirrup

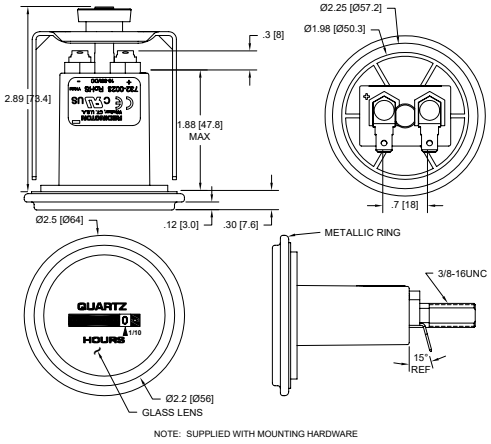

NOTE: SUPPLIED WITH MOUNTING HARDWARE

Panel Opening: 2.0" [50.6]

Part Numbers

732-0001	3-Hole Round, 10-80VDC, ¼" [6.3mm] spade terminals, hours & 1/10's
732-0002	Flush-Rectangular, 10-80VDC, ¼" [6.3mm] spade terminals, hours & 1/10's
732-0003	Flush-Round, 10-80VDC, ¼" [6.3mm] spade terminals, hours & 1/10's
732-0004	2-Hole Rectangular, 10-80VDC, ¼" [6.3mm] spade terminals, hours & 1/10's
732-0013	Panel mt, Round, Cup, stainless steel bezel, 10-80VDC, ¼" [6.3mm] spade terminals, hours & 1/10's
732-0014	Panel mt, Round, Cup, black bezel, 10-80VDC, ¼" [6.3mm] spade terminals, hours & 1/10's
732-0023	Panel mt, Round, Stirrup, stainless steel bezel, 10-80VDC, ¼" [6.3mm] spade terminals, hours & 1/10's
732-0030	Square 1.9" (48mm), 10-80VDC, ¼" [6.3mm] spade terminals, hours & 1/10's
5003-008	IP66 and NEMA 4X, 12 Gasket for Models 732-0003, 732-0013 & 732-0023
5003-009	IP66 and NEMA 4X, 12 Gasket for Model 732-0002
5003-010	IP66 and NEMA 4X, 12 Gasket for Model 732-0004
5003-011	IP66 and NEMA 4X, 12 Gasket for Model 732-0001
732-0004-EVAL	732 Evaluation Kit

custom is our passion

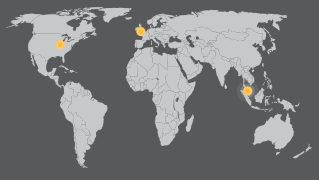

www.trumeter.com

Trumeter (The Americas)
6601 Lyons Rd, Suite H-7
Coconut Creek, Florida
FL 33073,
USA
Tel: +1 954 725 6699
Email: sales.usa@trumeter.com

Trumeter (Europe)
Pilot Mill
Alfred Street
Bury,
BL9 9JR
Tel: +44 161 674 0960
Email: sales.uk@trumeter.com

Innovative Design Technologies Sdn. Bhd
Lot 5881, Lorong Iks Bukit Minyak 1
Taman Perindustrian Iks, 14000 Bukit Tengah
Penang, Malaysia
Web: www.idtworld.com
Tel: + 604 5015700
Email: sales.my@idtworld.com