DIPTRONICS MANUFACTURING INC.

Speed & Technique

DTSHW-6,DTS(G)MW-6 SERIES

LEAD FREE

RoHS Compliant

DIMENSIONS

DTSMW-64.65.67.69

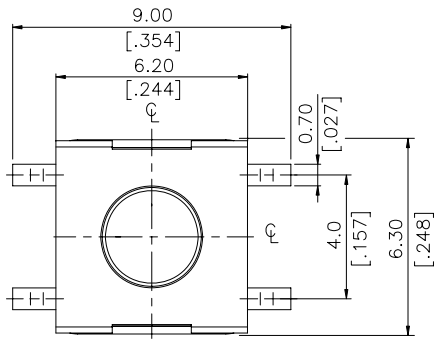

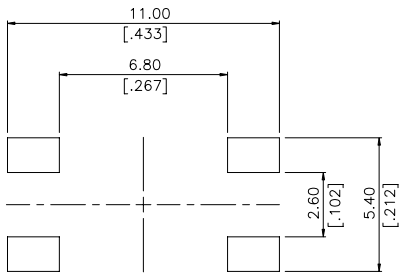

P.C.B. LAYOUT

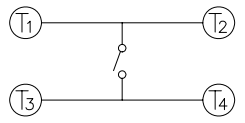

CIRCUIT DIAGRAM

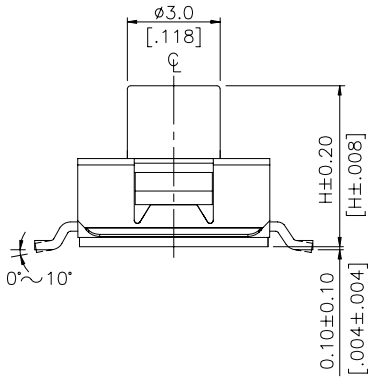

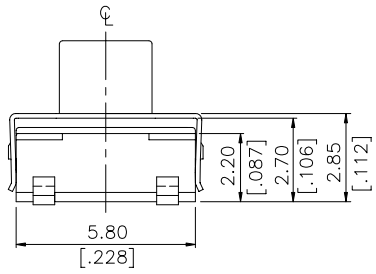

DTSMW-69	3.8mm[.150]
DTSMW-67	5.2mm[.205]
DTSMW-65	3.5mm[.138]
DTSMW-64	4.5mm[.177]
PART NO:	H

General Tolerance：±0.2mm

DTSMW-68

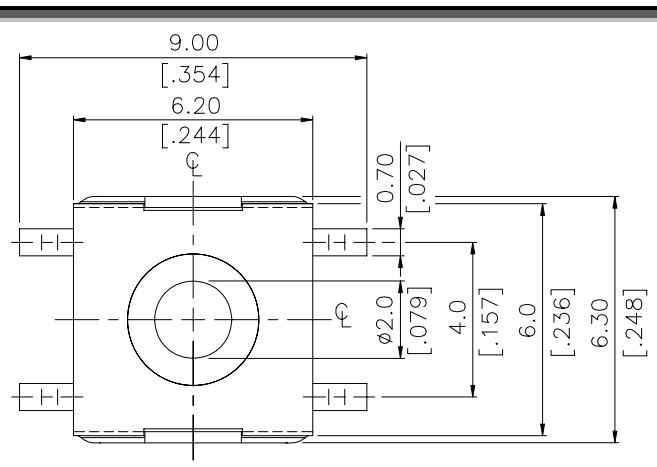

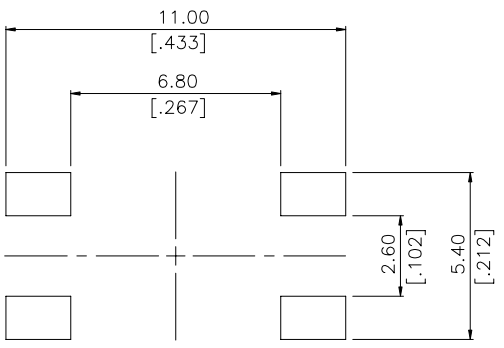

(SCALE 8:1)

P.C.B. LAYOUT

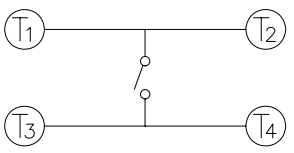

CIRCUIT DIAGRAM

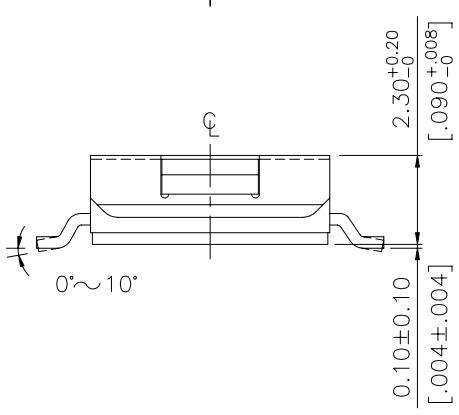

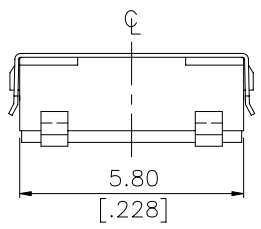

General Tolerance：±0.2mm

DTSGMW-66

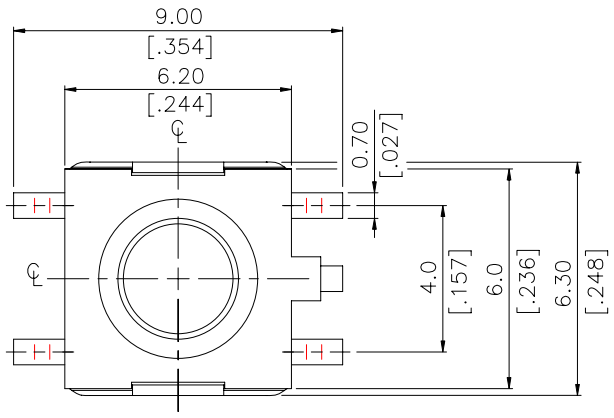

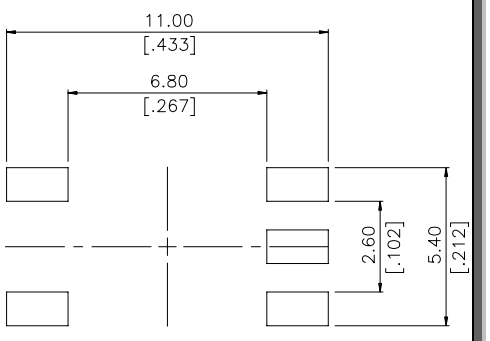

P.C.B. LAYOUT

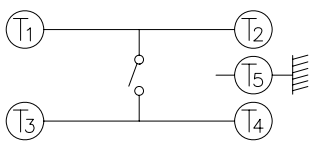

CIRCUIT DIAGRAM

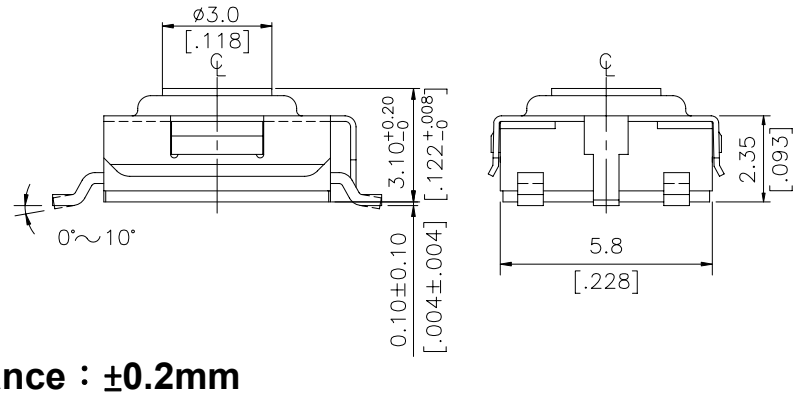

General Tolerance：±0.2mm

DTSMW-66

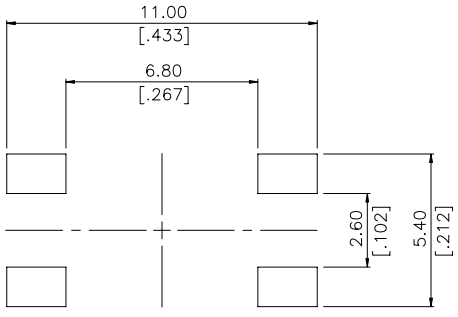

(SCALE 8:1)

P.C.B. LAYOUT

DTSHW-64.65.67.69

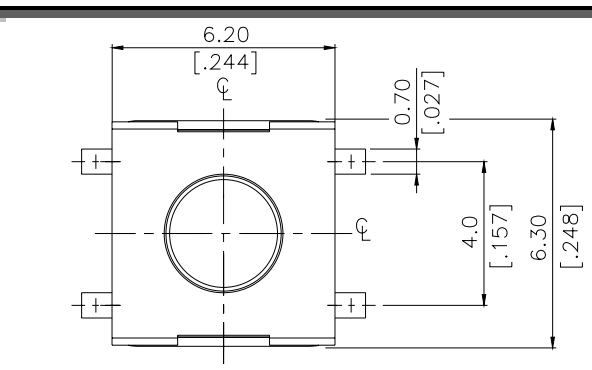

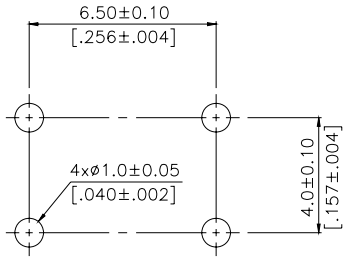

P.C.B. LAYOUT

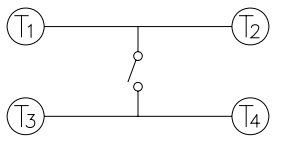

CIRCUIT DIAGRAM

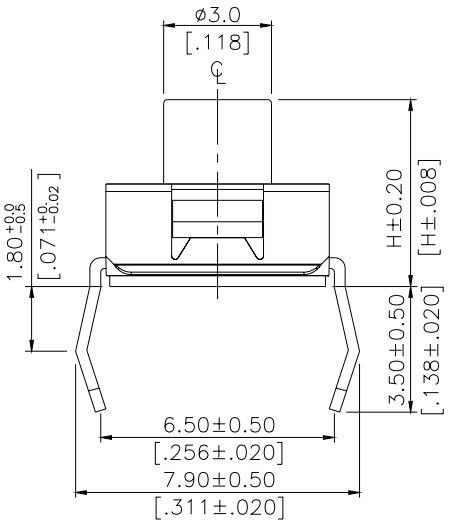

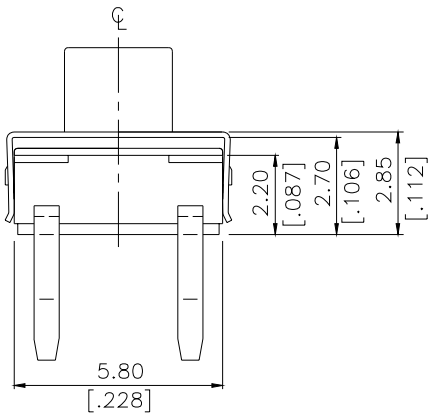

DTSMW-69	3.8mm[.150]
DTSMW-67	5.2mm[.205]
DTSMW-65	3.5mm[.138]
DTSMW-64	4.5mm[.177]
PART NO:	H

General Tolerance：±0.2mm

DTSHW-68

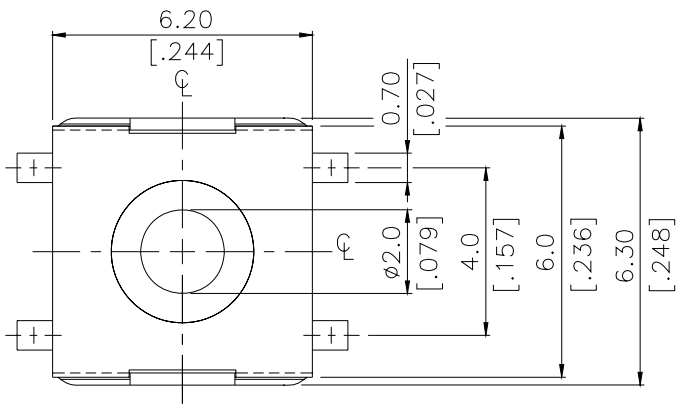

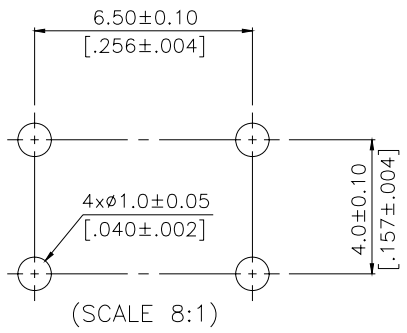

(SCALE 8:1)

P.C.B. LAYOUT

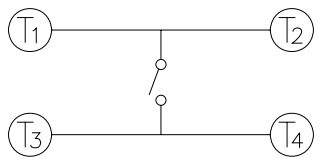

CIRCUIT DIAGRAM

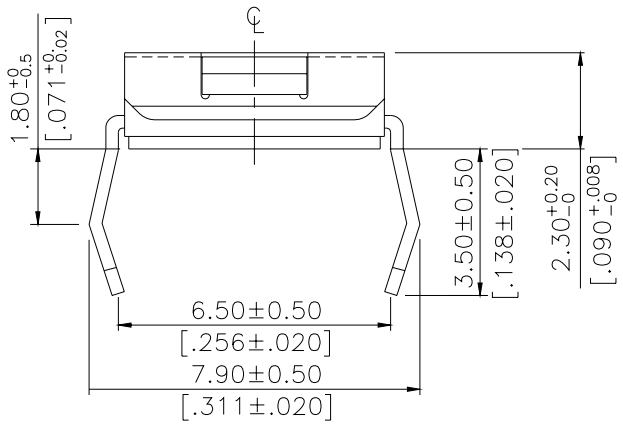

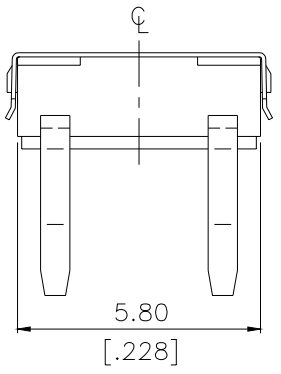

General Tolerance：±0.2mm

DTSHW-66

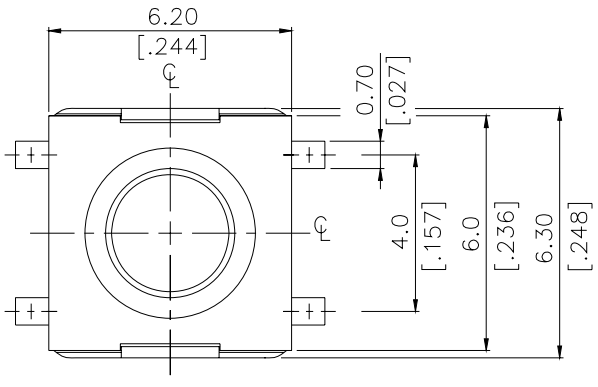

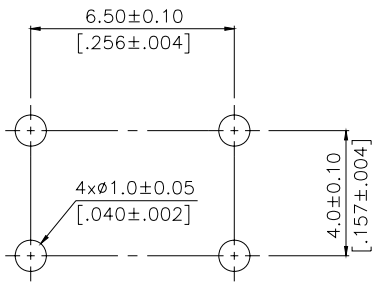

(SCALE 8:1)

P.C.B. LAYOUT

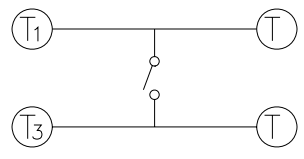

CIRCUIT DIAGRAM

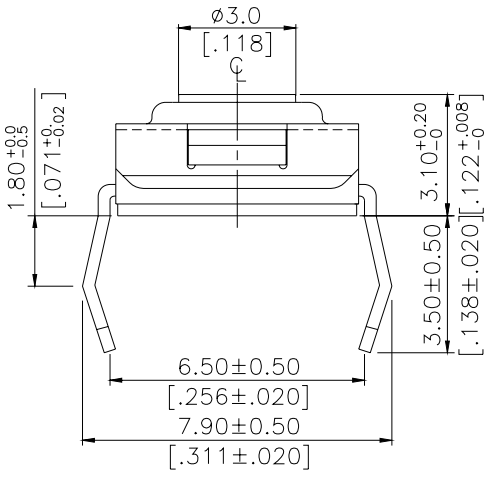

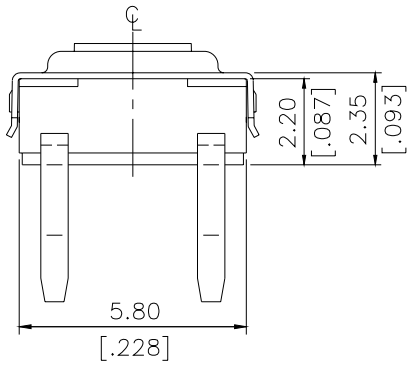

General Tolerance：±0.2mm

HOW TO ORDER

DTS- □ W - □ □ □ - □ – □

Package Style:
B = Tube
T/R = Tape & Reel

Soldering
V=Lead Free Solderable

Color of Stem for Operating Force:
N = Brown, 160g (66N)
180gf (69N, 65N, 64N, 67N)
S = Silver, 160gf
R = Red, 260gf
T = Transparent, 360gf (69T, 65T, 67T)

Dimension H:
66 = 3.1mm (N)
68 = 2.3mm (S)
69 = 3.8mm (N,R,T)
67 = 5.2mm (N,R,T)
65 = 3.5mm (N,R,T)
64 = 4.5mm (N,R)
H = Through Hole Terminals
M = Surface Mounting Terminals
GM = S.M.T & With Ground Terminal (For 66 Only)

SPECIFICATION

△MECHANICAL
Operation Force:
360± 90gf, Transparent (T), DTSH(M)W – 69, 67, 65
260± 70gf Red (R), DTSH(M)W – 69,67,65,64
180± 50gf Brown (N), DTS(M)W – 69,67,65,64
160 ± 50gf Brown (N), DTS(M)W – 66, DTSGMW-66
160 ± 50gf Silver (S), DTSH(M)W – 68
Stop Strength: Max 3kgf vertical static load continuously for 15 seconds
Stroke: 0.25 +0.20 / - 0.1 mm 66N, 68S
0.6 ±0.2mm, 69, 67T
0.45 ±0.2mm, 69, 67, 64,65N(R),65T
Operation Temperature: -25℃ to +70℃
Storage Temperature: -30℃ to +80℃

△ELECTRICAL
Electrical Life:
500,000 cycles min. for DTS□W-69, 65N(R)T, 64N(R)
500,000 cycles min. for DTS□W-67N(R)T
100,000 cycles min. for DTS□W-66N,68S, DTSGMW-66N
Rating: 50mA, 12VDC
Contact Resistance: 100mΩ max.
Insulation Resistance: 100MΩ min. at 500VDC
Dielectric Strength: 250VAC/ minute
Contact Arrangement: 1 pole 1 throw

MATERIAL

△COVER: Stainless steel
Nickel Silver (DTSGMW-66)
△TERMINAL: Brass with silver plated
△BASE: UL94V-0 Nylon High-Temp. Thermoplastic
Color: Black

ITEM NO.	DTSGMW-66N DTSHW-66N DTSMW-66N	DTSMW-68S DTSHW-68S	DTS(H)MW-69,65N(R)	DTS(H)MW-67N(R)T
STEM	High-Temp Thermoplastic Nylon UL94V-0 Color：Brown (N),160gf	None	Silicone Rubber	Silicone Rubber
ADHESIV TAPE	TEFLON	TEFLON(standard) KAPTON(V-option)	None	None
METAL STEM	Brass with Nickel plated	Brass with Nickel plated Color:silver(s),160gf	None	None
FILLER	None	None	None	Nylon
CONTACT	Phosphor bronze with silver cladding (Standard) Stainless steel (V-option)			Stainless steel

SOLDERING PROCESS

△WAVE SOLDERING : Recommended solder temperature at 500℉（260℃）max. 5 seconds subject to PCB 1.6mm thickness （soldering for through hole type）

△HAND SOLDERING : Use a soldering iron of 30 watts, controlled at 350℃ approximately 5 seconds while applying solder.

△REFLOW SOLDERING :

△ Temperature Profile:

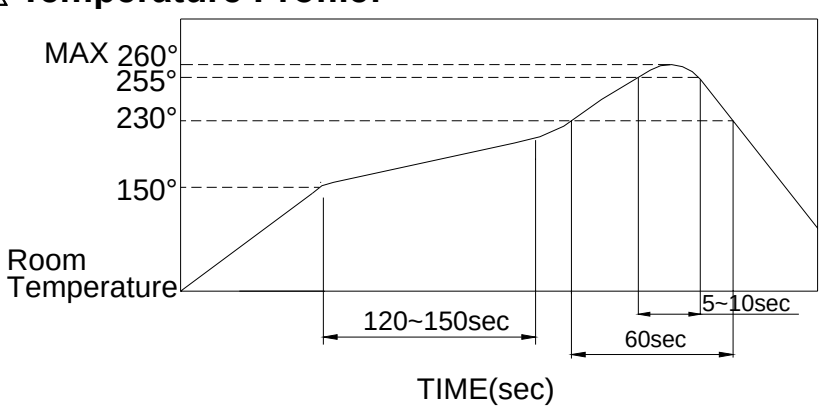

PACKING

Part Number	Number Per Tube	Number Per Reel
DTSHW-6□	75	-
DTSGMW-66	-	2000
DTSMW-66	75	2000
DTSMW-68	75	2000
DTSMW-69	75	1900
DTSMW-65	75	1900
DTSMW-67	75	900
DTSMW-64	75	900

DTSMW-67、64 REEL

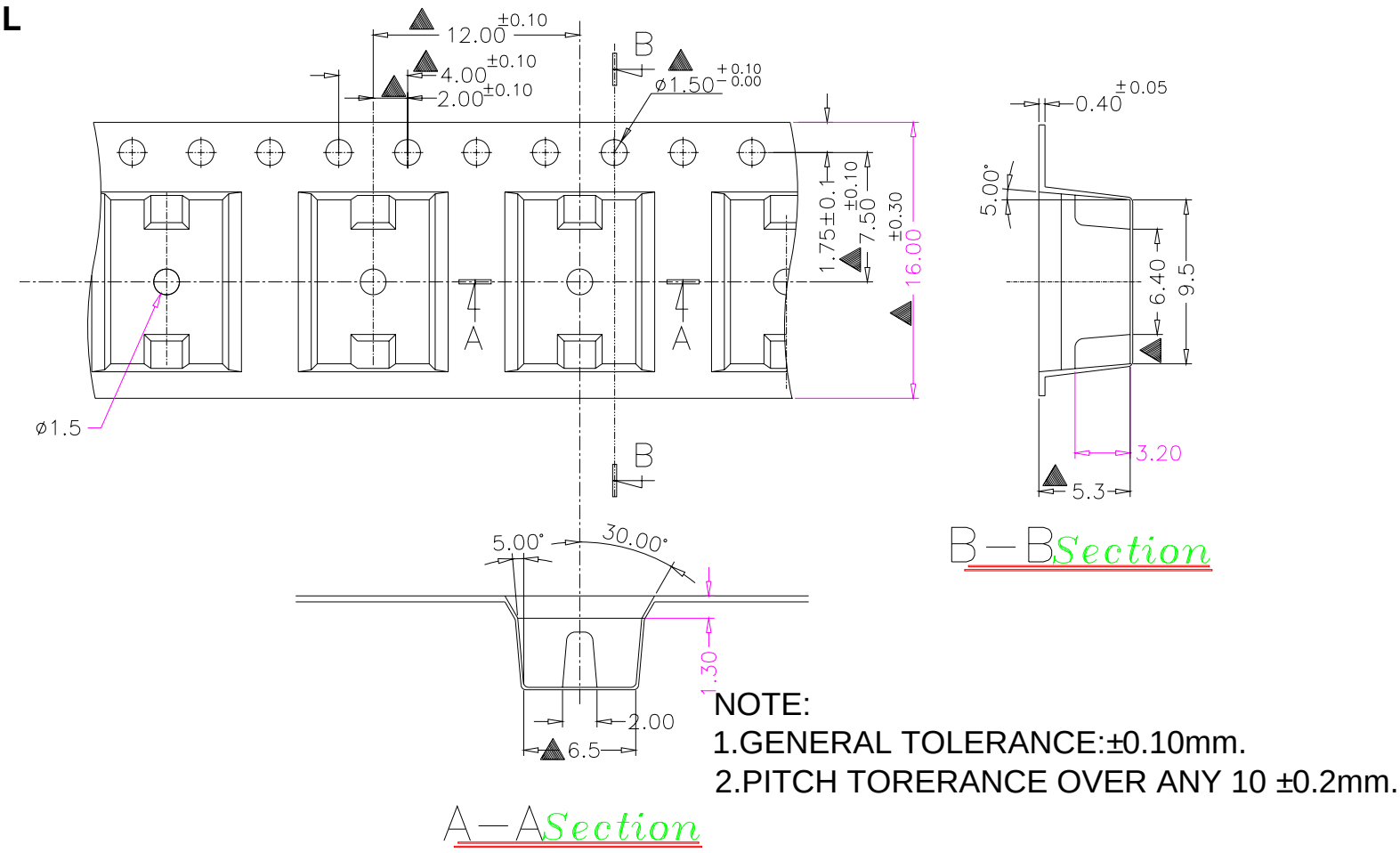

NOTE:
1.GENERAL TOLERANCE:±0.10mm.
2.PITCH TORERANCE OVER ANY 10 ±0.2mm.

DTSHW-6 TUBE

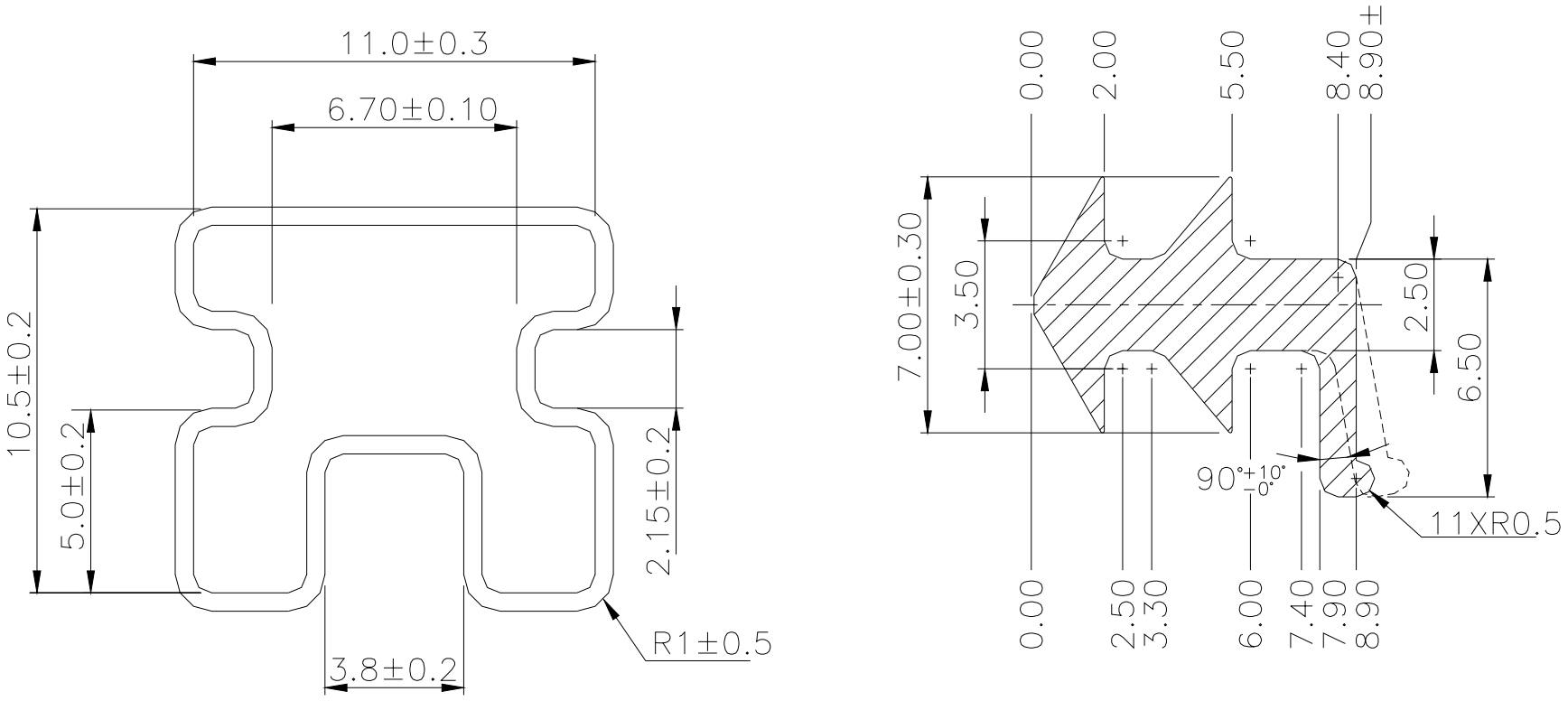

General Tolerance：±0.2mm

DTS(G)MW-66 REEL

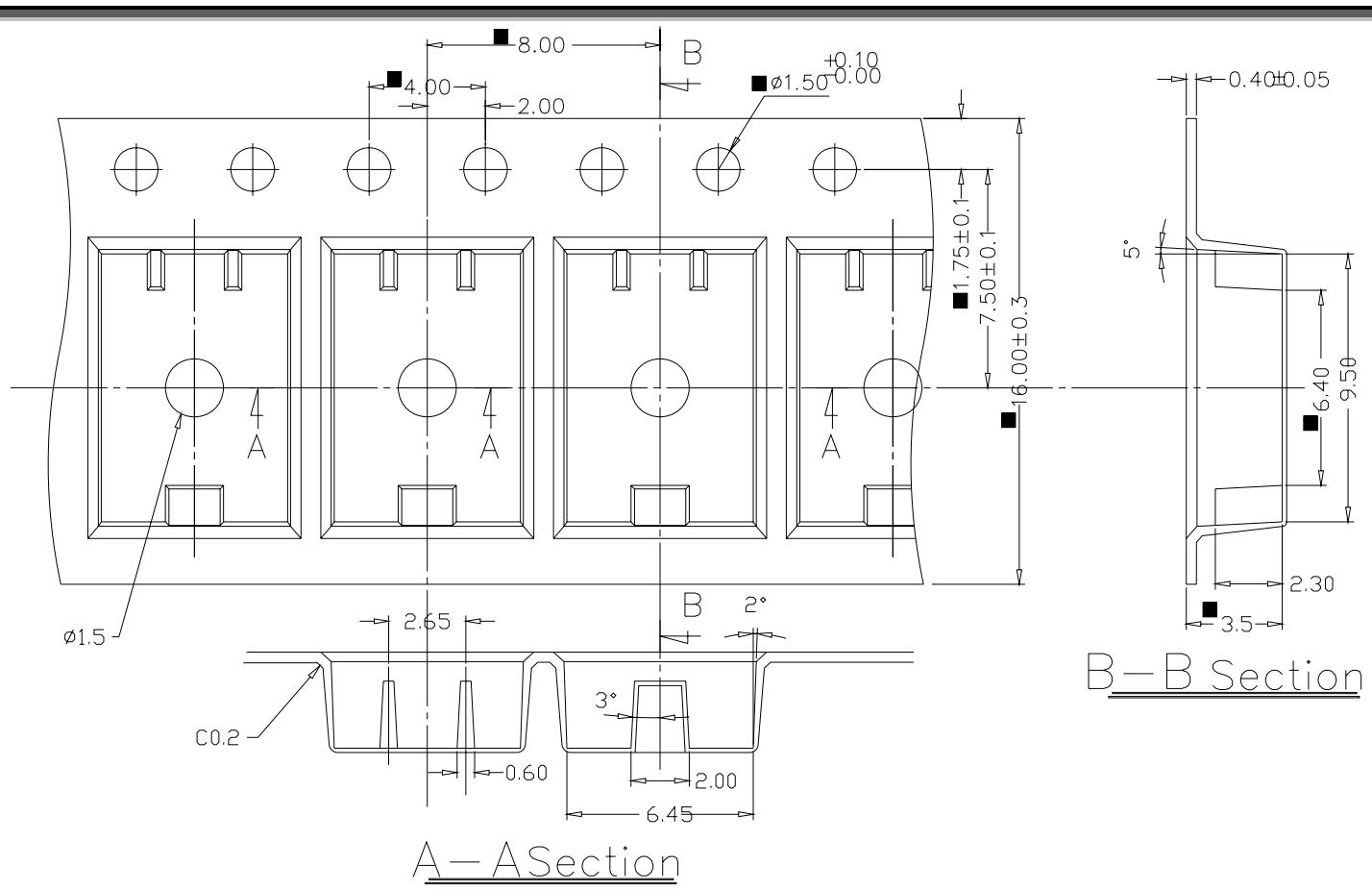

General Tolerance：±0.1mm

DTSMW-69、65 REEL

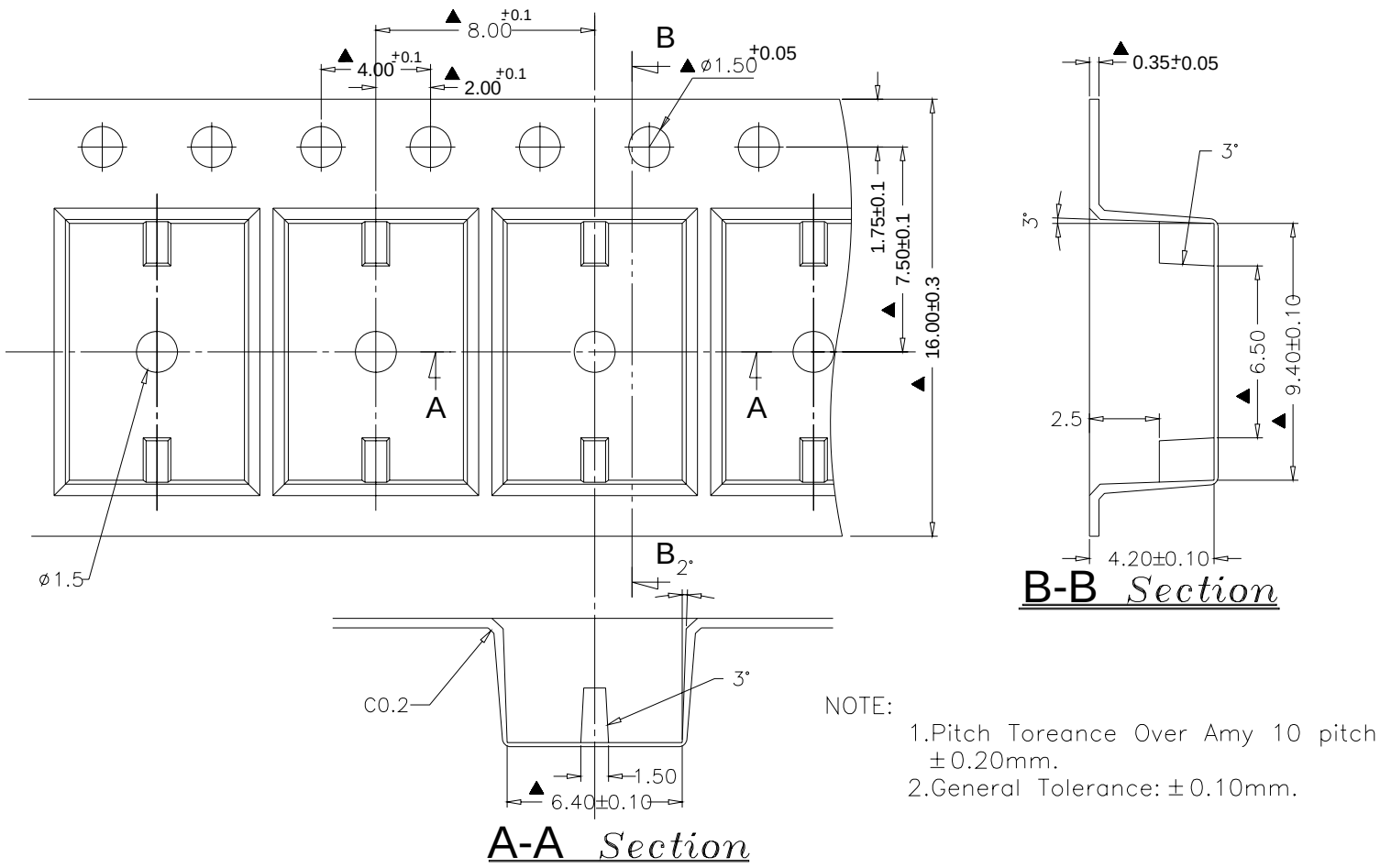

NOTE:
1. Pitch Toreance Over Amy 10 pitch ±0.20mm.
2. General Tolerance: ±0.10mm.

DTSMW-6 TUBE

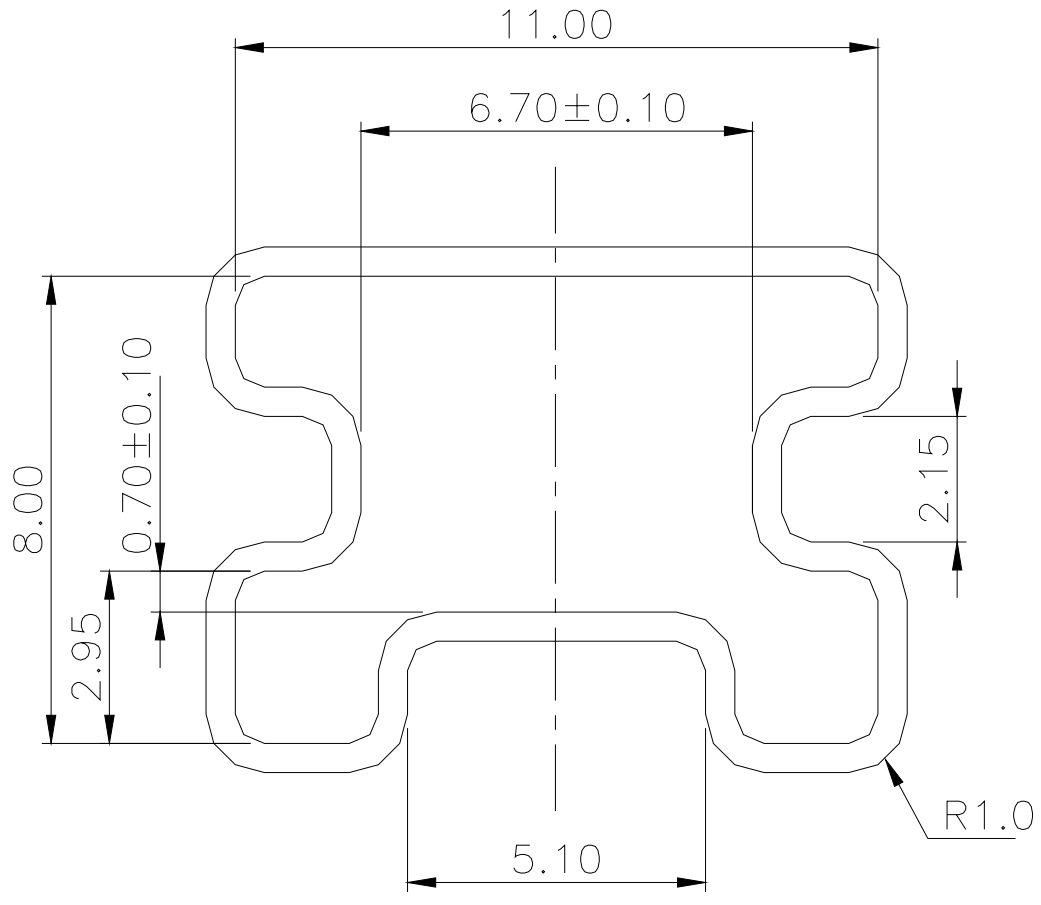

General Tolerance：±0.2mm