# E38515

## Thermowell for temperature sensors

THERMOWELL, D3/G1/2 conical/EL=30

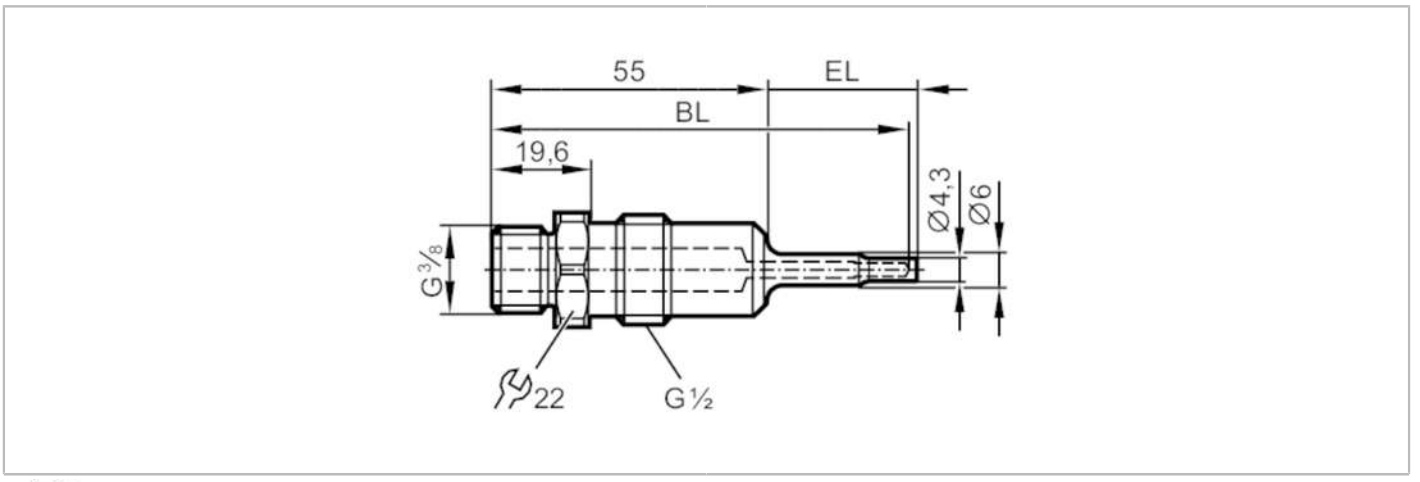


EC 1935/2004

| | | |
|---|---|---|
| **Application** | | |
| Design | | for temperature sensors EL = 83 mm |
| Pressure rating | [bar] | 16 |
| **Mechanical data** | | |
| Weight | [g] | 96.3 |
| Materials | | stainless steel (1.4435 / 316L) |
| Tightening torque | [Nm] | 20 |
| Sensor connection | | G 3/8 internal thread Ø 3 mm |
| Process connection | | G 1/2 |
| Surface characteristics Ra/Rz of the wetted parts | | < 0.4 / - |
| Installation length EL | [mm] | 30 |
| Bore length BL | [mm] | 83 |
| **Remarks** | | |
| Pack quantity | | 1 pcs. |