PP7553

Pressure switch with ceramic measuring cell

PP-025-RBG14-QFPKG/US/ /V

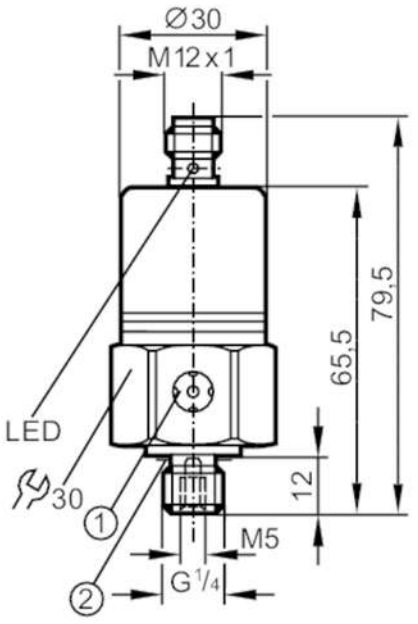

1 ventilation
2 Sealing

Product characteristics				
Number of inputs and outputs		Number of digital outputs: 2		
Measuring range		0...25 bar	0...363 psi	0...2.5 MPa
Process connection		threaded connection G 1/4 external thread internal thread:M5		
Application				
Application		for industrial applications		
Media		liquids and gases		
Medium temperature	[°C]	-25...90		
Min. bursting pressure		350 bar	5075 psi	35 MPa
Pressure rating		150 bar	2175 psi	15 MPa
Type of pressure		relative pressure		
Electrical data				
Operating voltage	[V]	9.6...36 DC; (communication mode: 18...32)		
Current consumption	[mA]	< 45		
Min. insulation resistance	[MΩ]	100; (500 V DC)		
Protection class		III		
Reverse polarity protection		yes		
Power-on delay time	[s]	0.3		
Inputs / outputs				
Number of inputs and outputs		Number of digital outputs: 2		
Outputs				
Total number of outputs		2		
Output signal		switching signal; IO-Link; (configurable)		

PP7553

Pressure switch with ceramic measuring cell

PP-025-RBG14-QFPKG/US/ /V

Electrical design	PNP		
Number of digital outputs	2		
Output function	normally open / normally closed; (parameterisable)		
Max. voltage drop switching output DC [V]	2		
Permanent current rating of switching output DC [mA]	250		
Switching frequency DC [Hz]	170		
Short-circuit protection	yes		
Type of short-circuit protection	pulsed		
Overload protection	yes		
Measuring/setting range			
Measuring range	0...25 bar	0...363 psi	0...2.5 MPa
Set point SP	0.2...25 bar	4...362 psi	0.02...2.5 MPa
Reset point rP	0.1...24.9 bar	2...360 psi	0.01...2.49 MPa
In steps of	0.1 bar	2 psi	0.01 MPa
Factory setting		SP1 = 6.3 bar	rP1 = 5.8 bar
		SP2 = 18.8 bar	rP2 = 18.3 bar
		OUT1 = Hno	OUT2 = Hno
Accuracy / deviations			
Switch point accuracy [% of the span]	< ± 0,5		
Repeatability [% of the span]	< ± 0,1; (with temperature fluctuations < 10 K)		
Characteristics deviation [% of the span]	< ± 0,25 (BFSL) / < ± 0,5 (LS); (BFSL = Best Fit Straight Line; LS = limit value setting)		
Hysteresis deviation [% of the span]	< ± 0,1		
Long-term stability [% of the span]	< ± 0,1; (per year)		
Temperature coefficient zero point [% of the span / 10 K]	< ± 0,2; (0...80 °C)		
Temperature coefficient span [% of the span / 10 K]	< ± 0,2; (0...80 °C)		
Response times			
Response time [ms]	< 3		
Damping process value dAP in steps [s]	0,003 - 0,006 - 0,010 - 0,017 - 0,060 - 0,125 - 0,250 - 0,500		
Interfaces			
Communication interface	IO-Link		
Transmission type	COM2 (38,4 kBaud)		
IO-Link revision	1.0		
Profiles	no profile		
SIO mode	yes		
Required master port type	A		
Process data analogue	1		

PP7553

Pressure switch with ceramic measuring cell

PP-025-RBG14-QFPKG/US/ /V

Process data binary		2	
Min. process cycle time	[ms]	2.3	
Supported DeviceIDs		**Type of operation**	**DeviceID**
		default	5
Operating conditions			
Ambient temperature	[°C]	-25...85	
Storage temperature	[°C]	-40...100	
Protection		IP 68; (7 days / 1 m water depth / 0.1 bar)	
Tests / approvals			
EMC		immunity	EN 61000-6-2
		EN 61000-4-2 ESD	4 kV contact discharge / 15 kV air discharge
		EN 61000-4-3 HF radiated	20 V/m
		EN 61000-4-4 Burst	4 kV coupling clamp
		EN 61000-4-5 Surge	0,5 kV supply / 1 kV signal for DC units
		EN 61000-4-6 HF conducted	10 V
		immunity	according to the automotive directive 1995/54/EC / 04/104EG / 05/83/EG
		absorber chamber test to ISO 11452-2:	80 V/m
		EN 50155	Klasse T3, C1, S1
Shock resistance		DIN IEC 60068-2-27 / DIN IEC 60068-2-29	1000 g
		DIN EN 61373	category 3
Vibration resistance		DIN IEC 68-2-6	20 g (10...2000 Hz)
		DIN EN 60068-2-64	14 g
		DIN EN 61373	category 2
MTTF	[years]	310	
Pressure Equipment Directive		Sound engineering practice; can be used for group 2 fluids; group 1 fluids on request	
Mechanical data			
Weight	[g]	226.5	
Housing		cylindrical	
Dimensions	[mm]	Ø 30 / L = 79.5	
Materials		stainless steel (304/1.4301); FKM; EPDM/X; PA	
Materials (wetted parts)		stainless steel (303/1.4305); ceramics; FKM	
Min. pressure cycles		100 million	
Process connection		threaded connection G 1/4 external thread internal thread:M5	
Restrictor element integrated		no (can be retrofitted)	
Displays / operating elements			
Display		operation	2 x LED, green
		switching status	2 x LED, yellow
Teach function		yes	
Remarks			
Remarks		with reference to UL: "limited voltage" with overcurrent protection in accordance with UL508	
Pack quantity		1 pcs.	

PP7553

Pressure switch with ceramic measuring cell

PP-025-RBG14-QFPKG/US/ /V

Electrical connection

Connector: 1 x M12; coding: A

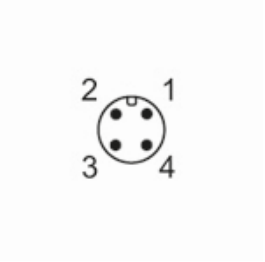

Connection

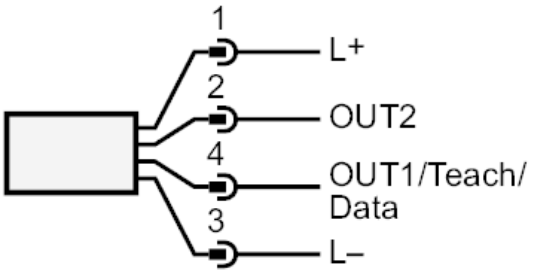

OUT1	switching output
OUT2	switching output Diagnostic output