AL1300

IO-Link master with PROFINET interface

IO-Link Master DL PN 4P IP67

Alternative articles: AL1304

When selecting an alternative article and accessories please note that technical data may differ!

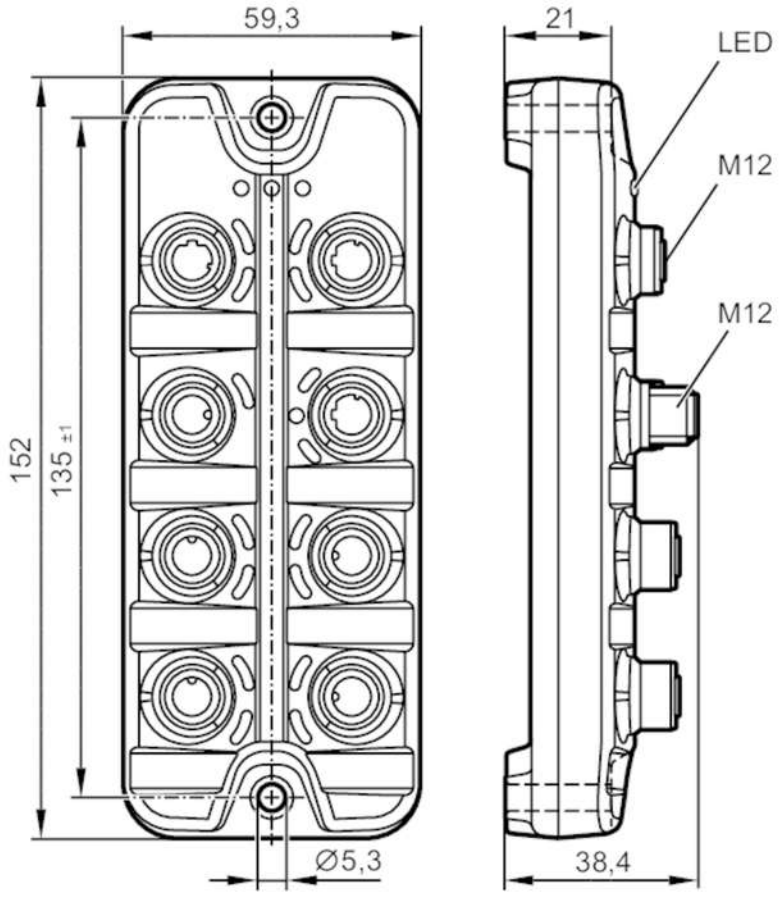

Application		
Application		I/O modules for field applications
Daisy-chain function		fieldbus interface
Electrical data		
Operating voltage	[V]	20...30 DC; (US ; to SELV/PELV)
Current consumption	[mA]	300...3900; (US)
Protection class		III
Sensor supply US		
Max. current load total	[A]	3.6
Inputs / outputs		
Total number of inputs and outputs		8; (configurable)
Number of inputs and outputs		Number of digital inputs: 8; Number of digital outputs: 4
Inputs		
Number of digital inputs		8; (IO-Link Port Class A: 4 x 2)

AL1300

IO-Link master with PROFINET interface

IO-Link Master DL PN 4P IP67

Switching level high	[V]	11...30
Switching level low	[V]	0...5
Digital inputs protected against short circuits		yes
Outputs		
Number of digital outputs		4; (IO-Link Port Class A: 4 x 1)
Max. current load per output	[mA]	300
Short-circuit proof		yes
Interfaces		
Communication interface		Ethernet; IO-Link
Ethernet - PROFINET		
Transmission standard		100Base-TX
Transmission rate		100 MBit/s
Protocol		PROFINET
Factory settings		IP address: 0.0.0.0
		subnet mask: 0.0.0.0
		gateway IP address: 0.0.0.0
		MAC address: see type label
Note on interfaces		CC-C (Conformance Class C) (IRT-Switch)
		Netload Class III
		SNMP (Simple Network Management Protocol)
		MRP (Media Redundancy Protocol)
		Supported network topologies: line
		ring
Ethernet - Internet of Things		
Transmission standard		10Base-T; 100Base-TX
Transmission rate		10 MBit/s; 100 MBit/s
Protocol		MQTT JSON
Factory settings		IP address: 169.254.x.x
		subnet mask: 255.255.0.0
		gateway IP address: 0.0.0.0
		MAC address: see type label
Note on interfaces		Secure protocol: HTTPS
IO-Link Master		
Transmission type		COM1 (4,8 kBaud); COM2 (38,4 kBaud); COM3 (230,4 kBaud)
IO-Link revision		1.1
Number of ports class A		4
Operating conditions		
Ambient temperature	[°C]	-25...60
Storage temperature	[°C]	-25...85
Max. relative air humidity	[%]	90
Protection		IP 65; IP 66; IP 67
Protection rating (NEMA 250)		6P
Pollution degree		2

AL1300

IO-Link master with PROFINET interface

IO-Link Master DL PN 4P IP67

Chemical media		ISO 16750-5	AA, BA, BD, HLP, CC, DB, DC, DD, CA
		NEMA 250 5.13.1	AA
Tests / approvals			
EMC		EN 61000-6-2	
		EN 61000-6-4	
Shock resistance		DIN EN 60068-2-27	
Vibration resistance		DIN EN 60068-2-64 2009-04	
		DIN EN 60068-2-6 2008-10	
MTTF	[years]	95	
Mechanical data			
Weight	[g]	301	
Materials		housing: PA orange; socket: brass nickel-plated	
Sealing material		FKM	
Remarks			
Remarks		For further information please see the operating instructions.	
Pack quantity		1 pcs.	

Electrical connection - Ethernet

Connector: M12; coding: D; Sealing: FKM



PROFINET X21, X22	
1	TX +
2	RX +
3	TX -
4	RX -
5	not used

IoT X23	
1	TX +
2	RX +
3	TX -
4	RX -
5	not used

Electrical connection - Process connection

Connector: M12; coding: A; Sealing: FKM

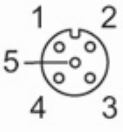

AL1300

IO-Link master with PROFINET interface

IO-Link Master DL PN 4P IP67

IO-Link Port Class A X01...X04	
1	Sensor supply (US) L+
2	digital input
3	Sensor supply (US) L-
4	C/Q IO-Link
5	not used

Electrical connection - power supply

Connector: M12; coding: A



X31	
1	+ 24 V DC (US)
2	not used
3	GND (US)
4	not used