E12559

Connection cable

VDOGS030PLS0002H03DOGH030MSS

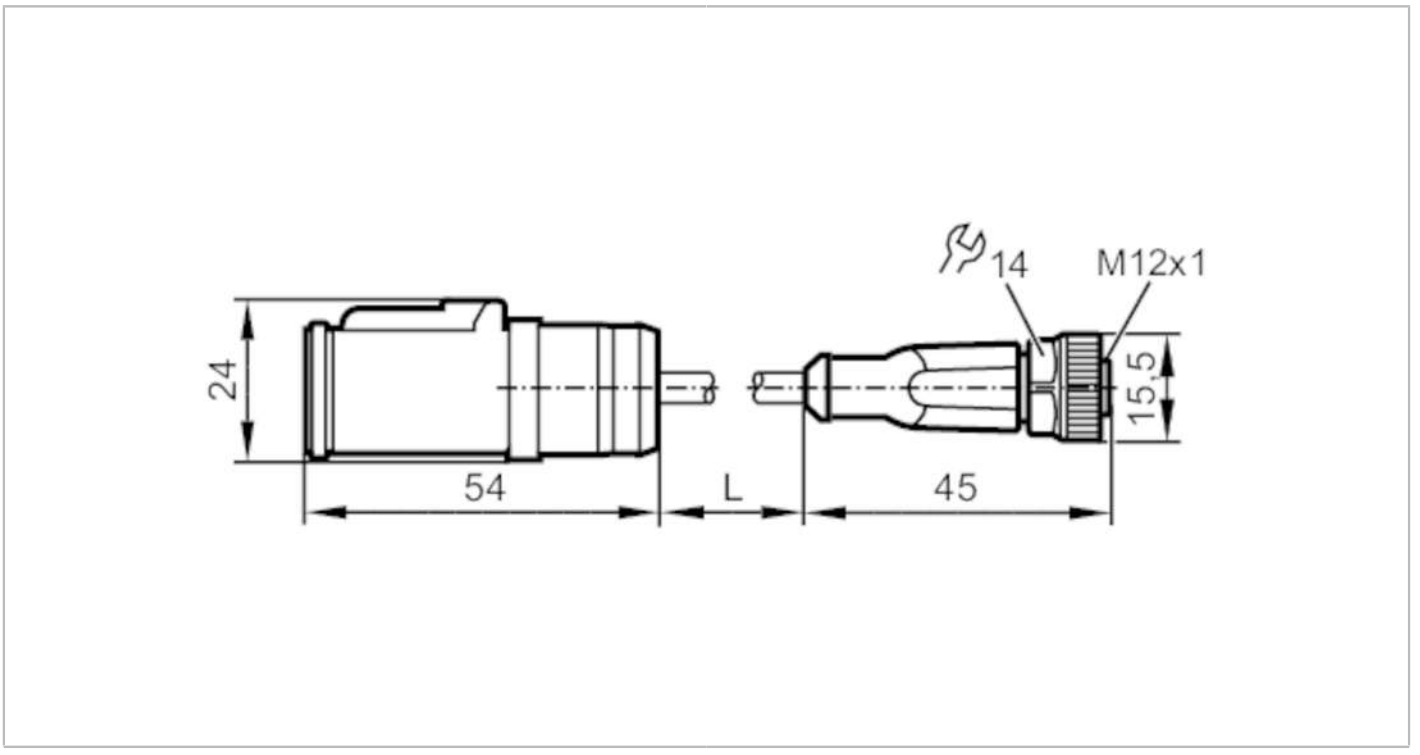

Application		
Special feature		Free from silicone; Halogen-free; Drag chain suitability
Free from silicone		yes
Electrical data		
Operating voltage	[V]	8...32 DC
Protection class		III
Max. current load total	[A]	4
Operating conditions		
Ambient temperature	[°C]	-40...80
Ambient temperature (moving)	[°C]	-20...80
Protection		IP 67; (mating connector plugged in)
Mechanical data		
Weight	[g]	123.4
Materials		PA; socket: TPU orange; Sealing: FKM
Material nut		brass, nickel-plated
Drag chain suitability		yes
Drag chain suitability	bending radius for flexible use	min. 10 x cable diameter
	travel speed	max. 3.3 m/s for a horizontal travel length of 5 m and max. acceleration of 5 m/s²
	bending cycles	> 5 Mio.
	torsional strain	± 180 °/m
Remarks		
Pack quantity		1 pcs.

E12559

Connection cable

VDOGS030PLS0002H03DOGH030MSS

Electrical connection - socket

Connector: 1 x DEUTSCH connector, straight

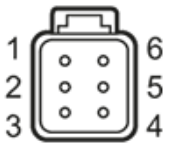

Electrical connection

Cable: 2 m, PUR, Halogen-free, black, Ø 5.4 mm; 3 x 0.50 mm² (28 x Ø 0.15 mm)

Connection

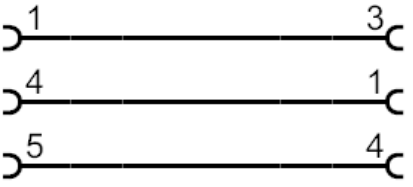

Electrical connection - socket

Connector: 1 x M12, straight; coding: A; Locking: brass, nickel-plated; Tightening torque: 0.6...1.5 Nm

