Metal bodied limit switch
Series MN78

Description **MN78-868 SM**	Article number **6087000133**

Switching diagram

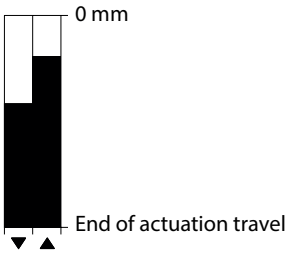

Direction of actuation

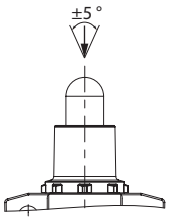

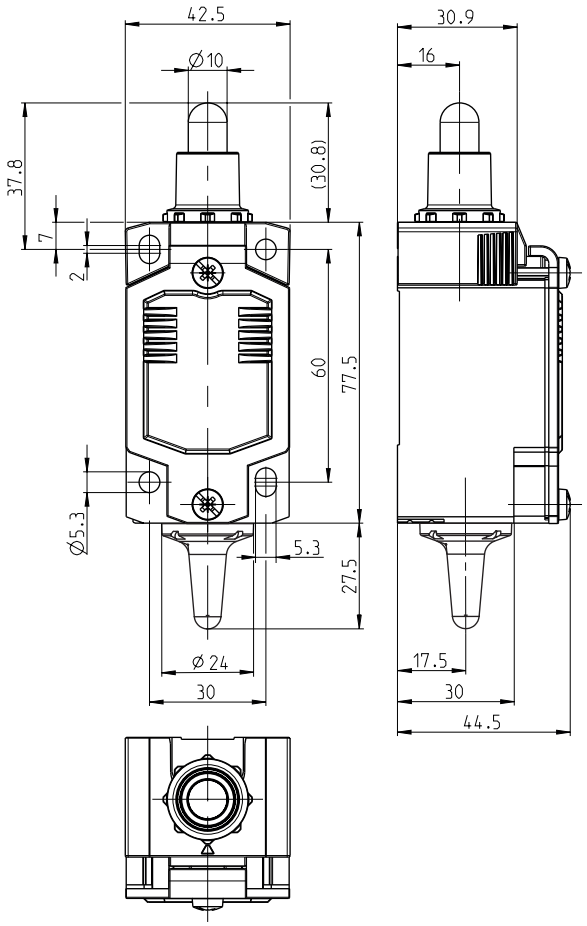

Operating data	
Voltage supply	Electrodynamic energy generator (energy harvesting)
Transmission protocol	EnOcean 868 MHZ
Typical operating distances	approximately 80 meters in open space without obstacles approximately 20 meters in industrial environments with structural obstacles

Mechanical data	
Enclosure	Die-cast aluminium (colour: black))
Cover	Sheet aluminium (colour: black))
Actuator	Plunger (Steel, nickel)
Ambient air temperature	–15 °C ... +70 °C
Storage temperature	–30 °C ... +80 °C
Mechanical life	1 x 10^6 operating cycles
Weight	≈ 0,25 kg
Protection type	IP66 / IP67 acc. EN 60529, Type 4X – Indoor Use only
Installation position	operator definable

Switching frequency depending on the receiver	
3600 cycles / hour	1 transmitter signal per relay output of the receiver
1800 cycles / hour	2 to 28 simultaneous transmitter signals per relay output of the receiver
720 cycles / hour	1 transmitter per relay output of the receiver in two-stage mode

Standards	
	IEC 60947-5-1
	EN 60947-5-1

EU Conformity	
	acc. to directive 2014/53/EU (RED-directive)

Technical modifications and errors excepted.
The technical datasheet corresponds to the technical state as of 2026-02-17 and will not be removed in case of changes.