# Product data sheet
## Characteristics

# XXA30S2VM12
Ultrasonic sensor, stainless steel, cylindrical M30, angled, 2 m, 0...10 V



## Main

| | |
|---|---|
| Range of product | OsiSense XX |
| Sensor type | Ultrasonic sensor |
| Series name | General purpose |
| Sensor name | XXA |
| Sensor design | Cylindrical M30 |
| Detection system | Diffuse (with 90° head) |
| [Sn] nominal sensing distance | 2 m adjustable with remote teach push-button |
| Material | Metal |
| Type of output signal | Analogue |
| Wiring technique | 5-wire |
| Analogue output function | 0...10 V |
| [Us] rated supply voltage | 24 V DC with reverse polarity protection |
| Electrical connection | Male connector M12 5 pins |
| [Sd] sensing range | 0.155…2 m |
| IP degree of protection | IP65 conforming to IEC 60529<br>IP67 |

## Complementary

| | |
|---|---|
| Enclosure material | Stainless steel 316L |
| Front material | Epoxy<br>Rubber<br>Resin |
| Supply voltage limits | 14…30 V DC |
| Function available | With synchronisation mode<br>Software configurable |
| [Sa] assured operating distance | 0.155…2 m (teach mode) |
| Blind zone | 155 mm |
| Transmission frequency | 120 kHz |
| Repeat accuracy | 0.1 % |
| Deviation angle from 90° of object to be detected | -12…12 ° |
| Minimum size of detected object | Cylinder diameter 1 mm at 1.4 m |
| Status LED | Output state: 1 LED (yellow) |

Disclaimer: This documentation is not intended as a substitute for and is not to be used for determining suitability or reliability of these products for specific user applications

| | |
|---|---|
| | Echo state: 1 LED (green) |
| Current consumption | 65 mA |
| Maximum switching capacity | >= 1 kOhm overload and short-circuit protection |
| Setting-up | Teach mode<br>Configurator software |
| Maximum delay first up | 250 ms |
| Maximum delay recovery | 200 ms |
| Marking | CE |
| Threaded length | 74.7 mm |
| Height | 30 mm |
| Width | 30 mm |
| Depth | 129.6 mm |
| Product weight | 0.18 kg |

## Environment

| | |
|---|---|
| Standards | EN/IEC 60947-5-2<br>CSA C22.2 No 14<br>UL 508 |
| Product certifications | CULus<br>E2<br>EAC<br>RCM<br>Ecolab |
| Ambient air temperature for operation | -25…70 °C |
| Ambient air temperature for storage | -40…80 °C |
| Vibration resistance | +/-1 mm conforming to IEC 60068-2-6 (f = 10…55 Hz) |
| Shock resistance | 30 gn in all 3 axes for 11 ms conforming to IEC 60068-2-27 |
| Resistance to electrostatic discharge | 8 kV conforming to IEC 61000-4-2 |
| Resistance to electromagnetic fields | 10 V/m level 3 conforming to IEC 61000-4-3 |
| Resistance to fast transients | 2 kV conforming to IEC 61000-4-4 |

## Offer Sustainability

| | |
|---|---|
| EU RoHS Directive | Not applicable, out of EU RoHS legal scope |
| Environmental Disclosure | Product Environmental Profile |
| Circularity Profile | No need of specific recycling operations |

## Contractual warranty

| | |
|---|---|
| Warranty | 18 months |

## Dimensions

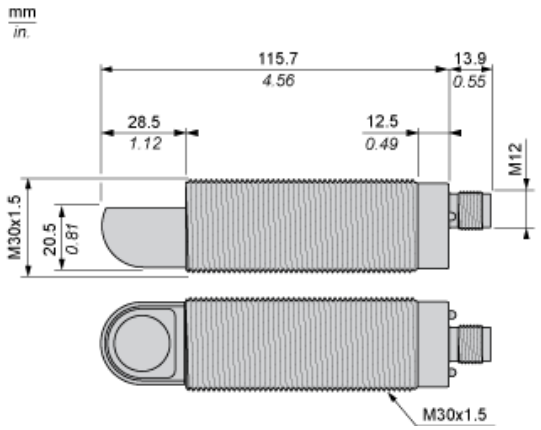
mm
in.
115.7
4.56
13.9
0.55
28.5
1.12
12.5
0.49
M12
M30x1.5
20.5
0.81
M30x1.5

## Connections

### Connector Wiring

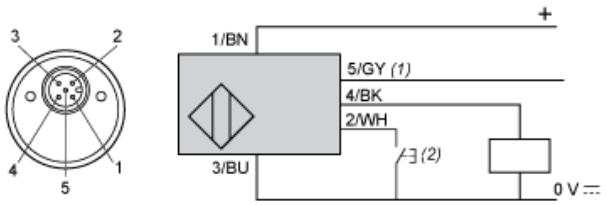


(1) : Synchronization
(2) : External setting pushbutton or XXZPB100 remote teach pushbutton.

| Pin number | Wire color | Description |
|---|---|---|
| 1 | BN: Brown | + 24VDC |
| 2 | WH: White | Input teach |
| 3 | BU: Blue | 0 VDC |
| 4 | BK: Black | Output |
| 5 | GY: Grey | Synchronization |

### Wiring Scheme. Analog Output

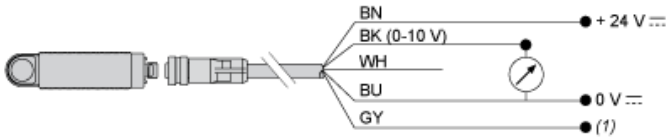


(1) : Synchronization
0-10 V: 1 kΩ…∞

### Wiring for the Synchronization Function (Side by Side Application)

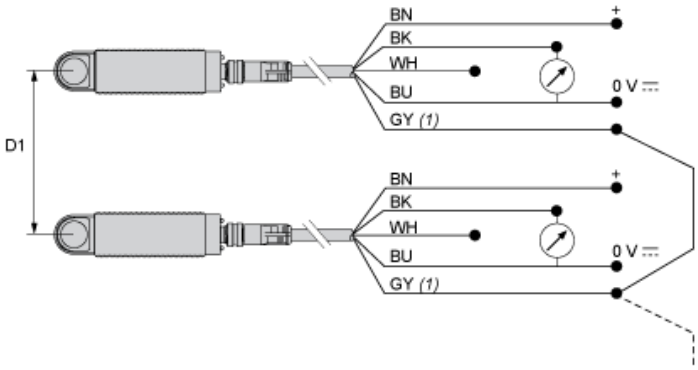


(1) : Synchronization
D1 : 1/8 Sn
BN : Brown
WH : White
BU : Blue
BK : Black
GY : Grey

NOTE: Up to 8 sensors can be synchronized to operate side by side by electrically connecting all pin no.5 (grey) wires together.

To synchronize more than 8 sensors, a PLC output can be used (the pins no.5 must be simultaneously driven by the rising edge of a pulse).

## Performance Curves

### Detection Curve with 100 x 100 mm / 3.94 x 3.94 inches Square Target

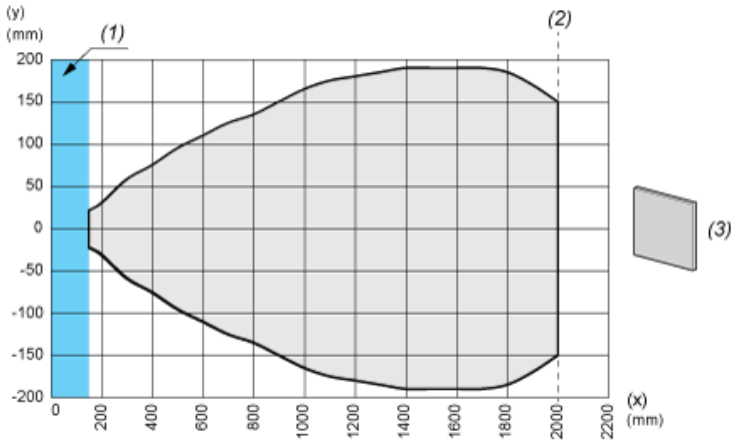


(X) : Target distance
(Y) : Detection limit
(1) : Blind zone: 155 mm / 6.10 inches
(2) : Sn max.
(3) : 100 x 100 mm / 3.94 x 3.94 inches stainless steel plate

### Detection Curve with Round Bar

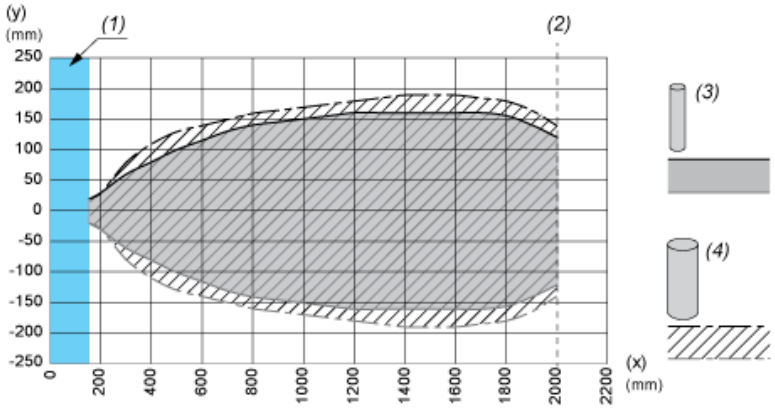


(X) : Target distance
(Y) : Detection limit
(1) : Blind zone: 155 mm / 6.10 inches
(2) : Sn max.
(3) : Ø 10 mm / 0.394 inches stainless steel cylinder
(4) : Ø 25 mm / 0.984 inches stainless steel cylinder