M/48, M/49 (EXCEL 22) 3/2
Direct solenoid actuated poppet valves

- Sub-base mounted and manifold mounted – compact and convenient
- Screwdriver manual override as standard
- Removable encapsulated coils
- Exhaust diffuser supplied as standard



Technical features

Medium:
Compressed air, filtered, lubricated and non lubricated

Operation:
Poppet valve, directly actuated spring return

Mounting:
Sub-base mounted or manifold

Port sizes:
M5 or G1/8

Operating pressure:
0 ... 10 bar (0 ... 145 psi)

Fluid/Ambient temperature:
-20 ... +50°C (-4 ... +122°F)
Air supply must be dry enough to avoid ice formation at temperatures below +2°C (+35°F).

Materials:
Coil: glass reinforced thermo plastic
Manual override base: glass reinforced PA
Armature: stainless iron
Sub-base: aluminium
Seals: NBR
Tube & spring: stainless steel

Electrical details for solenoid operators

Voltage tolerance	± 10%
Rating	100% continuous duty
Inlet orifice	1,0 mm or 1,6 mm
Electrical connection	Industrial Standard, 22 mm
Solenoid coil mounting	Four positions x 90°
Manual override	Push and turn to lock (plastic)
Protection class	IP 65 (with sealed plug)

Technical data - standard models

Symbol	Port size	Orifice (mm)	Actuation/return	Mounting	Flow (l/min)	Operating pressure (bar)	(psi)	Weight (kg)	(lbs)	Drawing No.	Model *1)
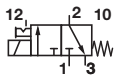	M5	1,0	Solenoid/spring	Single	30	0 ... 10	0 ... 145	0,12	0.26	1	M/48/MAZ*
	M5	1,0	Solenoid/spring	Manifold	30	0 ... 10	0 ... 145	0,3 ... 0,9	0.6 ... 2	2	DM/48/MAZ*/T#
	G1/8	1,0	Solenoid/spring	Single	30	0 ... 10	0 ... 145	0,12	0.26	1	M/49/MAZ*
	G1/8	1,0	Solenoid/spring	Manifold	30	0 ... 10	0 ... 145	0,3 ... 0,9	0.6 ... 2	2	DM/49/MAZ*/T#
	M5	1,6	Solenoid/spring	Single	77	0 ... 10	0 ... 145	0,12	0.26	1	M/48/MDZ*
	M5	1,6	Solenoid/spring	Manifold	77	0 ... 10	0 ... 145	0,3 ... 0,9	0.6 ... 2	2	DM/48/MDZ*/T#
	G1/8	1,6	Solenoid/spring	Single	77	0 ... 10	0 ... 145	0,12	0.26	1	M/49/MDZ*
	G1/8	1,6	Solenoid/spring	Manifold	77	0 ... 10	0 ... 145	0,3 ... 0,9	0.6 ... 2	2	DM/49/MDZ*/T#

* Insert voltage codes from table below.
*1) Connector plugs - ordered separately
Add number of valves in manifold up to 6 maximum.

Voltage codes and spare coils

22 mm coil - 1,0 mm orifice (low power)
for connector interface acc. to industrial standard

	Voltage	Power Inrush/Hold	Model	Code
	12 V d.c.	2 W	QM/48/12J/21	12J
	24 V d.c	2 W	QM/48/13J/21	13J
	24 V 50/60 Hz	4/2,5 VA	QM/48/14J/21	14J
	48 V 50/60 Hz	4/2,5 VA	QM/48/16J/21	16J
	110/120 V 50/60 Hz	4/2,5 VA	QM/48/18J/21	18J
	220/240 V 50/60 Hz	6/5,0 VA	QM/48/19J/21	19J

22 mm coil - 1,6 mm orifice
for connector interface acc. to industrial standard

	Voltage	Power Inrush/Hold	Model	Code
	12 V d.c.	7,5 W	QM/48/82J/21	82J
	24 V d.c	6 W	QM/48/83J/21	83J
	24 V 50/60 Hz	12/8 VA	QM/48/84J/21	84J
	48 V 50/60 Hz	12/8 VA	QM/48/86J/21	86J
	110/120 V 50/60 Hz	12/8 VA	QM/48/88J/21	88J
	220/240 V 50/60 Hz	12/8 VA	QM/48/89J/21	89J

Our policy is one of continued research and development. We therefore reserve the right to amend, without notice, the specifications given in this document. (1998 - 5022d) © 2024 IMI International s.r.o.

Connector plugs - ordered separately

Industrial standard 22 mm
2-pole + PE



0657868

Drawings

Dimensions in mm
Projection/First angle

1

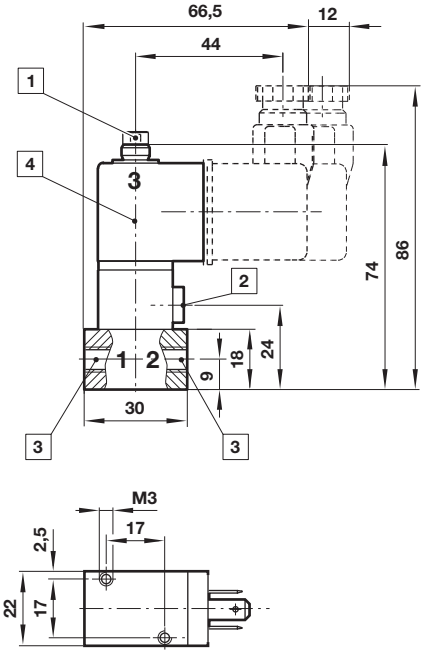

2

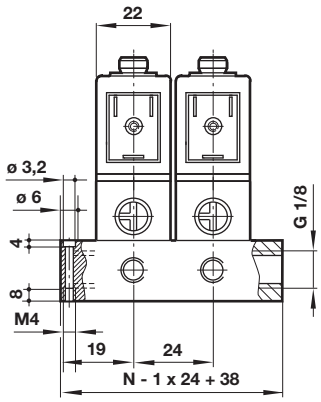

N = number of stations

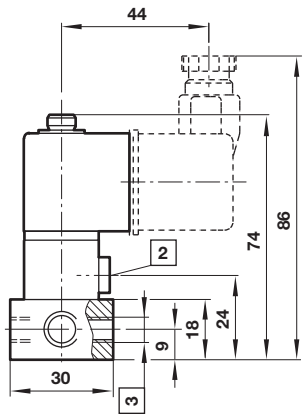

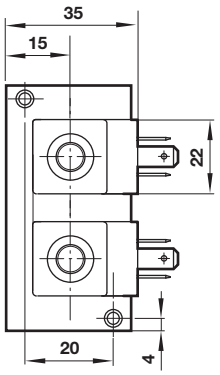

1 Exhaust port (M5) with diffuser
2 Screwdriver manual override
3 Port size M/48 (DM/48) – M5; M/49 (DM/49) – G1/8
4 Four positions x 90°

Warning

These products are intended for use in industrial compressed air systems only. Do not use these products where pressures and temperatures can exceed those listed under »Technical features/ data«.
Before using these products with fluids other than those specified, for non-industrial applications, life-support systems or other applications not within published specifications,
consult Norgren.
Through misuse, age, or malfunction, components used in fluid power systems can fail in various modes.

The system designer is warned to consider the failure modes of all component parts used in fluid power systems and to provide adequate safeguards to prevent personal injury or damage to equipment in the event of such failure.
System designers must provide a warning to end users in the system instructional manual if protection against a failure mode cannot be adequately provided.
System designers and end users are cautioned to review specific warnings found in instruction sheets packed and shipped with these products.

Our policy is one of continued research and development. We therefore reserve the right to amend, without notice, the specifications given in this document. (1998 - 5022d) © 2024 IMI International s.r.o.