Data sheet

Three-phase monitoring relays CM-PSS
CM-PSS.31 and CM-PSS.41

The three-phase monitoring relays CM-PSS.x1 monitor the phase parameters phase sequence, phase failure as well as over- and undervoltage.

All devices are available with two different terminal versions. You can choose between the proven screw connection technology (double-chamber cage connection terminals) and the completely tool-free Easy Connect Technology (push-in terminals).



2CDC 251 064 V0011

Characteristics

- Monitoring of three-phase mains for phase sequence (can be switched off), phase failure as well as over- and undervoltage
- TRMS measuring principle
- Fixed threshold values for over- and undervoltage
- Tripping delay T_v can be adjusted or switched off by means of a logarithmic scale (0 s; 0.1-30 s)
- ON-delayed or OFF-delayed tripping delay selectable
- Powered by the measuring circuit
- Precise adjustment by front-face operating controls
- Screw connection technology or Easy Connect Technology available
- Housing material for highest fire protection classification UL 94 V-0
- Tool-free mounting on DIN rail as well as demounting
- 2 c/o (SPDT) contacts
- 22.5 mm (0.89 in) width
- 3 LEDs for the indication of operational states

Approvals

cULus LISTED	UL 508, CAN/CSA C22.2 No.14	
GL	GL	
GOST	GOST	
CB	CB scheme	pending
CCC	CCC	
RMRS	RMRS	

Marks

CE	CE
C-Tick	C-Tick

Power and productivity for a better world™

Order data

Three-phase monitoring relays

Type	Rated control supply voltage = measuring voltage	Connection technology	Order code
CM-PSS.31P	3 x 380 V AC	Push-in terminals	1SVR 740 784 R2300
CM-PSS.31S		Screw terminals	1SVR 730 784 R2300
CM-PSS.41P	3 x 400 V AC	Push-in terminals	1SVR 740 784 R3300
CM-PSS.41S		Screw terminals	1SVR 730 784 R3300

Accessories

Type	Description	Order code
ADP.01	Adapter for screw mounting	1SVR 430 029 R0100
MAR.01	Marker label for devices without DIP switches	1SVR 366 017 R0100
COV.11	Sealable transparent cover	1SVR 730 005 R0100

Connection technology

Maintenance free Easy Connect Technology with push-in terminals

Type designation CM-xxS.yyP

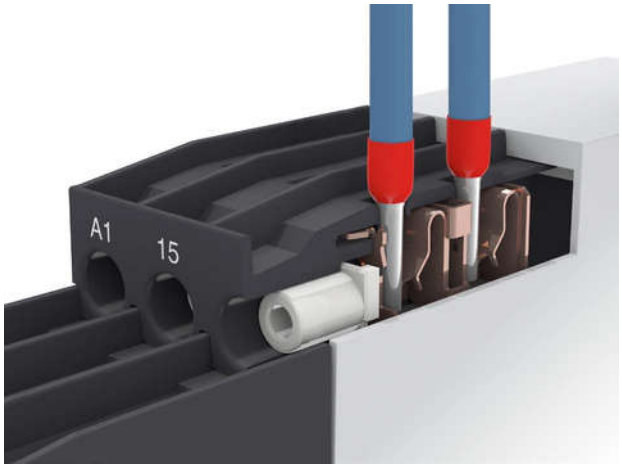

2CDC 253 026 F0011

Push-in terminals

- Tool-free connection of rigid and flexible wires with wire end ferrule according to DIN 46228-1-A, DIN 46228-4-E
  Wire size: 2 x 0.5-1.5 mm², (2 x 20 - 16 AWG)
- Easy connection of flexible wires without wire end ferrule by opening the terminals
- No retightening necessary
- One operation lever for opening both connection terminals
- For triggering the lever and disconnecting of wires you can use the same tool (Screwdriver according to DIN ISO 2380-1 Form A 0.8 x 4 mm (0.0315 x 0.157 in), DIN ISO 8764-1 PZ1 ø 4.5 mm (0.177 in))
- Constant spring force on terminal point independent of the applied wire type, wire size or ambient conditions (e. g. vibrations or temperature changes)
- Opening for testing the electrical contacting
- Gas-tight

Approved screw connection technology with double-chamber cage connection terminals

Type designation CM-xxS.yyS

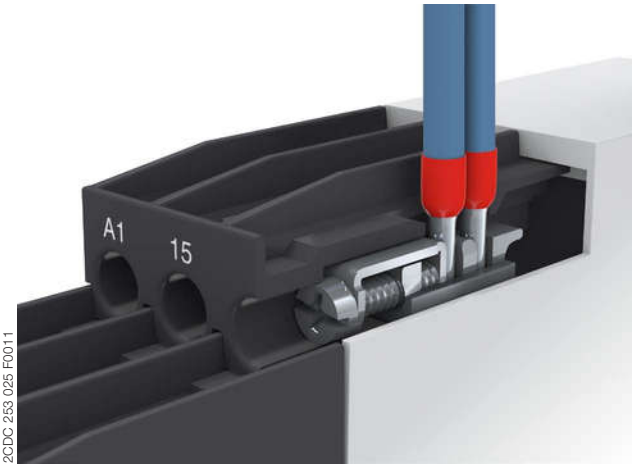

2CDC 253 025 F0011

Double-chamber cage connection terminals

- Terminal spaces for different wire sizes:
  fine-strand with/without wire end ferrule:
  1 x 0.5-2.5 mm² (2 x 20 - 14 AWG),
  2 x 0.5-1.5 mm² (2 x 20 - 16 AWG)
  rigid:
  1 x 0.5-4 mm² (1 x 20 - 12 AWG),
  2 x 0.5-2.5 mm² (2 x 20 - 14 AWG)
- One screw for opening and closing of both cages
- Pozidrive screws for pan- or crosshead screwdrivers according to DIN ISO 2380-1 Form A 0.8 x 4 mm (0.0315 x 0.157 in), DIN ISO 8764-1 PZ1 ø 4.5 mm (0.177 in)

Both the Easy Connect Technology with push-in terminals and screw connection technology with double-chamber cage connection terminals have the same connection geometry as well as terminal position.

Functions

Operating controls

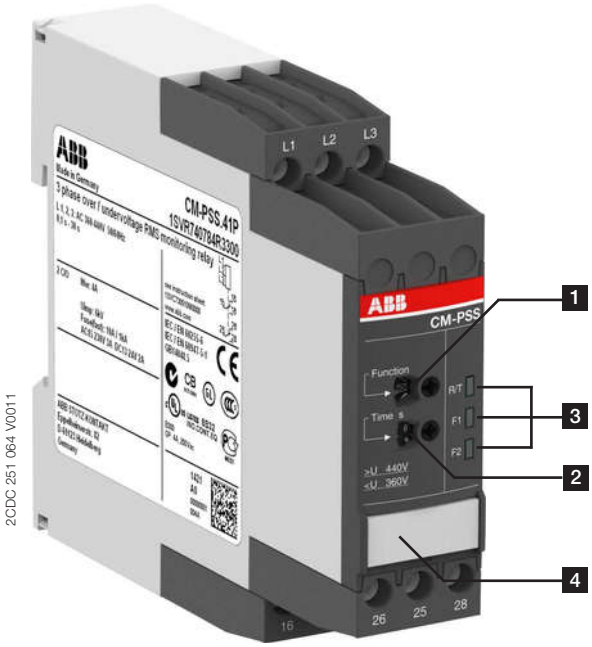

2CDC 251 064 V0011

1 **Function selection (see rotary switch "Function")**

2 **Adjustment of the tripping delay T_v**

3 **Indication of operational states**

R/T: red LED – Relay status / timing

F1: yellow LED – Fault message

F2: yellow LED – Fault message

4 **Marker label**

Application

The three-phase monitoring relays CM-PSS.x1 are designed for use in three-phase mains for monitoring the phase parameters phase sequence, phase failure as well as over- and undervoltage.

The CM-PSS.x1 provide an adjustable tripping delay and work according to the closed-circuit principle.

Operating mode

The CM-PSS.x1 have 2 c/o (SPDT) contacts and are available for 3-wire AC systems. The units are adjusted with front-face operating controls. The selection of ON-delay with phase sequence monitoring ⊠, OFF-delay with phase sequence monitoring ■, ON-delay without phase sequence monitoring ⊠ ⊘, OFF-delay without phase sequence monitoring ■ ⊘ is made with a rotary switch. The tripping delay T_v is adjustable over a range of instantaneous to a 30 s delay. Timing is displayed by a flashing yellow LED labelled R/T.

Adjustment potentiometer

Tripping delay T_v

The tripping delay T_v can be adjusted within a range of 0.1 to 30 s by means of a potentiometer with logarithmic scale. By turning to the left stop, the tripping delay can be switched off.

Rotary switch

Type of tripping delay and phase sequence monitoring

The type of tripping delay and phase sequence monitoring can be selected via the rotary switch „Function“.

	**ON-delay with phase sequence monitoring** The output relays de-energize as soon as a phase sequence error occurs. The output relays re-energize automatically as soon as the phase sequence is correct again.
	**OFF-delay with phase sequence monitoring** The output relays de-energize as soon as a phase sequence error occurs. The output relays re-energize automatically as soon as the phase sequence is correct again.
	**ON-delay without phase sequence monitoring** Phase sequence errors will not cause a tripping of the relay.
	**OFF-delay without phase sequence monitoring** Phase sequence errors will not cause a tripping of the relay.

Indication of operational states

LEDs, status information and fault messages

Operational state	R/T: LED yellow	F1: LED red	F2: LED red
Control supply voltage applied, output relay energized	⎍	-	-
Tripping delay T_v active	⎍⎍	-	-
Phase failure	-	⎍	⎍⎍
Phase sequence	-	⎍⎍ alternating	
Overvoltage	-	⎍	-
Undervoltage	-	-	⎍

Function descriptions / diagrams

Configuration of the devices is made by means of operating controls accessible on the front of the unit and signalling is made by means of front-face LEDs.

Phase sequence and phase failure monitoring

Applying control supply voltage begins the fixed start-up delay T_s. When T_s is complete and all phases are present with correct voltage, the output relays energize and the yellow LED R/T is on.

Phase sequence monitoring:

The output relays de-energize as soon as a phase sequence error occurs. The fault is displayed by alternated flashing of the LEDs F1 and F2. The output relays re-energize automatically as soon as the phase sequence is correct again.

Phase failure monitoring:

The output relays de-energize instantaneously if a phase failure occurs. The fault is indicated by lightning of LED F1 and flashing of LED F2. The output relays re-energize automatically as soon as the voltage returns to the tolerance range.

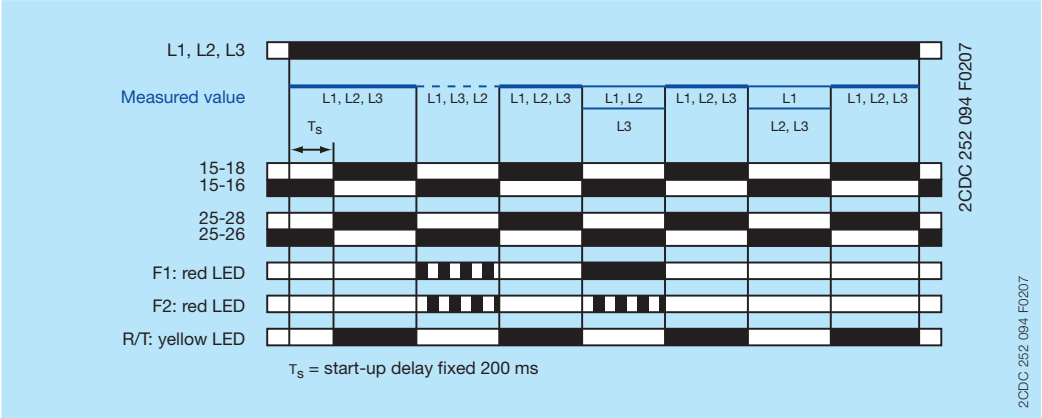

Over- and undervoltage monitoring

Applying control supply voltage begins the fixed start-up delay T_s. When T_s is complete and all phases are present with correct voltage and with correct phase sequence, the output relays energize and the yellow LED R/T is on.

Type of tripping delay = ON-delay ⊠

If the voltage to be monitored exceeds or falls below the set threshold value, the output relays de-energize after the set tripping delay T_v is complete. The LED R/T flashes during timing and turns off as soon as the output relays de-energize.

The output relays re-energize automatically as soon as the voltage returns to the tolerance range, taking into account a fixed hysteresis of 5 %. The LED R/T is on.

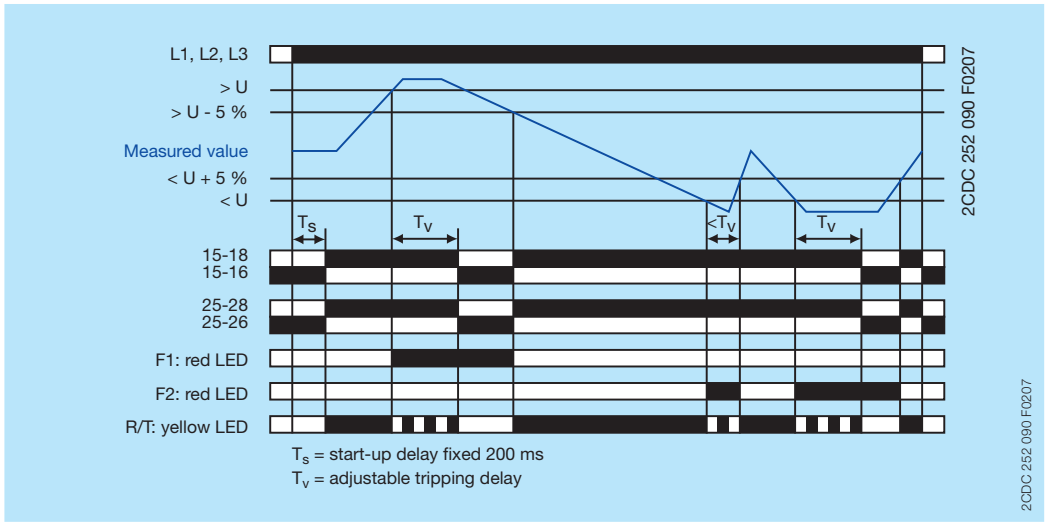

Type of tripping delay = OFF-delay ■

If the voltage to be monitored exceeds or falls below the set threshold value, the output relays de-energize instantaneously and the LED R/T turns off.

As soon as the voltage returns to the tolerance range, taking into account a fixed hysteresis of 5 %, the output relays re-energize automatically after the set tripping delay T_v is complete. The LED R/T flashes during timing and turns steady when timing is complete.

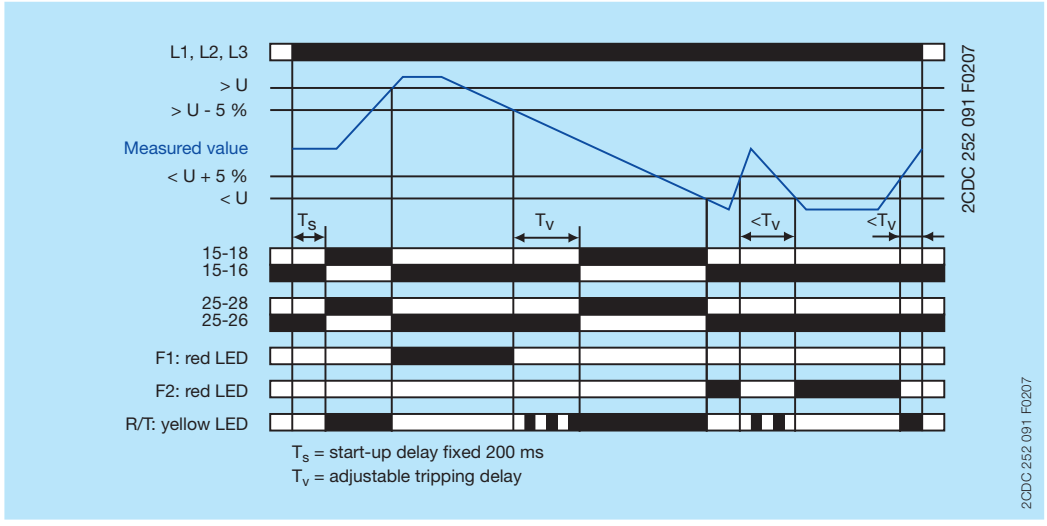

Electrical connection

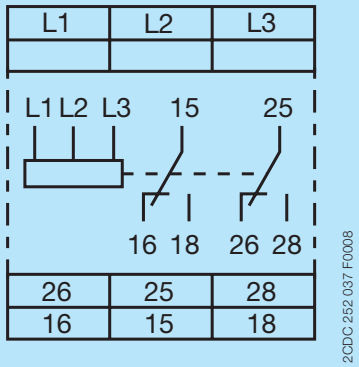

L1, L2, L3	Control supply voltage = measuring voltage
15-16/18	Output contacts - closed-circuit principle
25-26/28	

Connection diagram CM-PSS.31 and CM-PSS.41

Technical data

Data at T_a = 25 °C and rated values, unless otherwise indicated

Input circuit

Type		CM-PSS.31	CM-PSS.41
Supply circuit = measuring circuit		**L1, L2, L3**	
Rated control supply voltage U_s = measuring voltage		3 x 380 V AC	3 x 400 V AC
Rated control supply voltage U_s tolerance		-15...+10 %	
Rated frequency		50/60 Hz	
Frequency range		45-65 Hz	
Typical current / power consumption		25 mA / 18 VA (380 V AC)	25 mA / 18 VA (400 V AC)

Measuring circuit		**L1, L2, L3**	
Monitoring functions	Phase failure	■	■
	Phase sequence	can be switched off	can be switched off
	Over-/undervoltage	■	■
Measuring range	Overvoltage	3 x 418 V AC	3 x 440 V AC
	Undervoltage	3 x 342 V AC	3 x 360 V AC
Thresholds	Overvoltage	fixed	
	Undervoltage	fixed	
Hysteresis related to the threshold value	Over-/undervoltage	fixed 5 %	
Rated frequency of the measuring signal		50/60 Hz	
Frequency range of the measuring signal		45-65 Hz	
Maximum measuring cycle time		100 ms	
Accuracy within the rated control supply voltage tolerance		$\Delta U \leq 0.5$ %	
Accuracy within the temperature range		$\Delta U \leq 0.06$ % / °C	
Measuring method		True RMS	

Timing circuit	
Start-up delay T_s	fixed 200 ms
Tripping delay T_v	ON- or OFF-delay 0 s; 0.1-30 s adjustable
Repeat accuracy (constant parameters)	< ±0.2 %
Accuracy within the rated control supply voltage tolerance	$\Delta t \leq 0.5$ %
Accuracy within the temperature range	$\Delta t \leq 0.06$ % / °C

User interface

Indication of operational states		
Relay status / timing	R/T	yellow LED
Fault message	F1	red LED
Fault message	F2	red LED

Details see table ‚LEDs, status information and fault messages' on page 5 and ‚Function descriptions / diagrams' on page 5.

Output circuits

Kind of output		15-16/18	relay, 1st c/o (SPDT) contact
		25-26/28	relay, 2nd c/o (SPDT) contact
			1 x 2 (SPDT) contacts
Operating principle			closed-circuit principle [1]
Contact material			AgNi alloy, Cd free
Rated operational voltage U_e (IEC/EN 60947-1)			250 V
Minimum switching voltage / Minimum switching current			24 V / 10 mA
Maximum switching voltage / Maximum switching current			see load limit curves
Rated operational current I_e (IEC/EN 60947-5-1)		AC12 (resistive) at 230 V	4 A
		AC15 (inductive) at 230 V	3 A
		DC12 (resistive) at 24 V	4 A
		DC13 (inductive) at 24 V	2 A
AC rating (UL 508)		Utilization category (Control Circuit Rating Code)	B 300
		max. rated operational voltage	300 V AC
		max. continuous thermal current at B 300	5 A
		max. making/breaking apparent power at B 300	3600/360 VA
Mechanical lifetime			30 x 10^6 switching cycles
Electrical lifetime		AC12, 230 V, 4 A	0.1 x 10^6 switching cycles
Maximum fuse rating to achieve short-circuit protection		n/c contact	6 A fast-acting
		n/o contact	10 A fast-acting

General data

MTBF			on request	
Duty time			100 %	
Dimensions (W x H x D)		product dimensions	22.5 x 85.6 x 103.7 mm (0.89 x 3.37 x 4.08 in)	
		packaging dimensions	97 x 109 x 30 mm (3.82 x 4.29 x 1.18 in)	
Weight			**Screw connection technology**	**Easy Connect Technology (push-in)**
	net weight	CM-PSS.31	0.132 kg (0.291 lb)	0.123 kg (0.271 lb)
		CM-PSS.41	0.132 kg (0.291 lb)	0.123 kg (0.271 lb)
	gross weight	CM-PSS.31	0.157 kg (0.346 lb)	0.148 kg (0.326 lb)
		CM-PSS.41	0.157 kg (0.346 lb)	0.148 kg (0.326 lb)
Mounting			DIN rail (IEC/EN 60715), snap-on mounting without any tool	
Mounting position			any	
Minimum distance to other units			**CM-PSS.31**	**CM-PSS.41**
		horizontal	10 mm (0.39 in) in case of continuous voltage of ...	
			> 400 V	> 400 V
Material of housing			UL 94 V-0	
Degree of protection		housing	IP50	
		terminals	IP20	

[1] Closed-circuit principle: Output relay(s) de-energize(s) if measured value exceeds or falls below the adjusted threshold value.

Electrical connection

		Screw connection technology	Easy Connect Technology (push-in)
Wire size	fine-strand with(out) wire end ferrule	1 x 0.5-2.5 mm² (1 x 20-14 AWG) 2 x 0.5-1.5 mm² (2 x 20-16 AWG)	2 x 0.5-1.5 mm² (2 x 20-16 AWG)
	rigid	1 x 0.5-4 mm² (1 x 20-12 AWG) 2 x 0.5-2.5 mm² (2 x 20-14 AWG)	2 x 0.5-1.5 mm² (2 x 20-16 AWG)
Stripping length		8 mm (0.32 in)	
Tightening torque		0.6 - 0.8 Nm (5.31 - 7.08 lb.in)	-

Environmental data

Ambient temperature ranges	operation	-25...+60 °C
	storage	-40...+85 °C
Damp heat, cyclic (IEC/EN 60068-2-30)		55 °C, 6 cycles
Climatic category		3K3
Vibration, sinusoidal (IEC/EN 60255-21-1)		Class 2
Shock (IEC/EN 60255-21-2)		Class 2

Isolation data

Type		
Rated insulation voltage U_i	input circuit / output circuit	600 V
	output circuit 1 / output circuit 2	300 V
Rated impulse withstand voltage U_{imp} (IEC/EN 60664)	input circuit	6 kV, 1.2/50 µs
	output circuit	4 kV, 1.2/50 µs
Test voltage between all isolated circuits (routine test)		2.5 kV, 50 Hz, 1 s
Basic insulation	input circuit / output circuit	600 V
Protective separation (IEC/EN 61140, EN 50178)	input circuit / output circuit	-
Pollution degree (IEC/EN 60664, IEC/EN 60255-5)		3
Overvoltage category (IEC/EN 60664, IEC/EN 60255-5)		III

Standards

Product standard	IEC/EN 60255-6, EN 50178
Low Voltage Directive	2006/95/EC
EMC directive	2004/108/EC
RoHS directive	2002/95/EC

Electromagnetic compatibility

Type		
Interference immunity to		IEC/EN 61000-6-1, IEC/EN 61000-6-2
electrostatic discharge	IEC/EN 61000-4-2	Level 3 (6 kV / 8 kV)
radiated, radio-frequency, electromagnetic field	IEC/EN 61000-4-3	Level 3 (10 V/m)
electrical fast transient / burst	IEC/EN 61000-4-4	Level 3 (2 kV / 2 kHz)
surge	IEC/EN 61000-4-5	Level 4 (2 kV L-L)
conducted disturbances, induced by radio-frequency fields	IEC/EN 61000-4-6	Level 3 (10 V)
harmonics and interharmonics	IEC/EN 61000-4-13	Class 3
Interference emission		IEC/EN 61000-6-3, IEC/EN 61000-6-4
high-frequency radiated	IEC/CISPR 22, EN 55022	Class B
high-frequency conducted	IEC/CISPR 22, EN 55022	Class B

Technical diagrams

Load limit curves

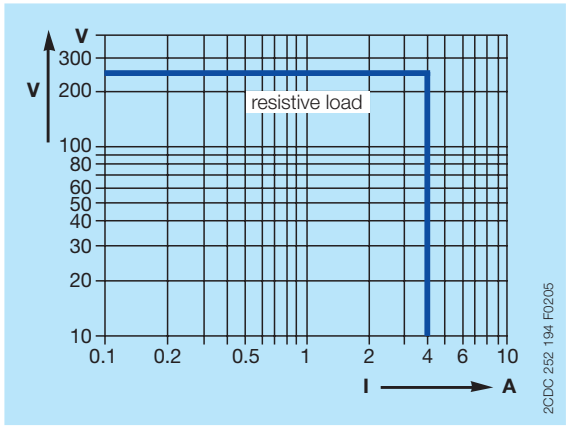

AC load (resistive)

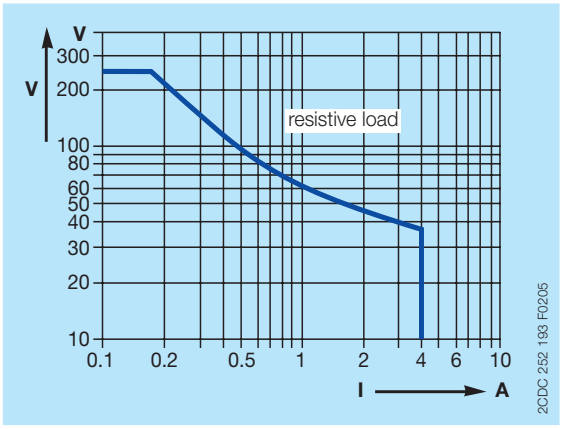

DC load (resistive)

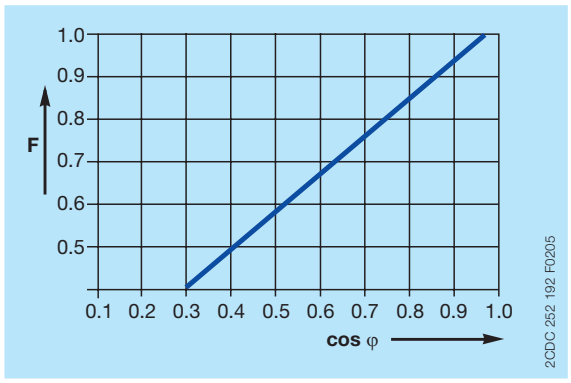

Derating factor F for inductive AC load

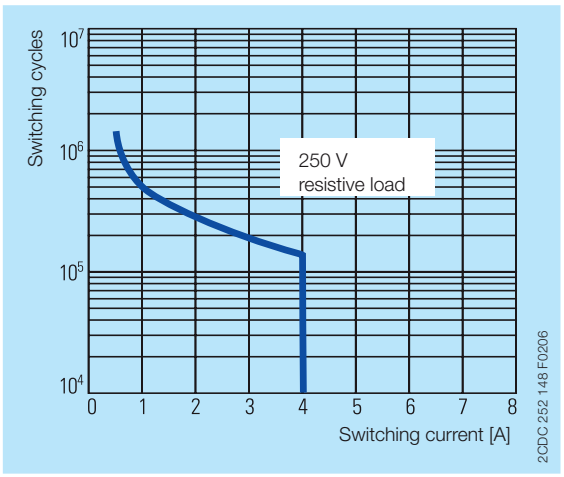

Contact lifetime

Dimensions

in **mm** and *inches*

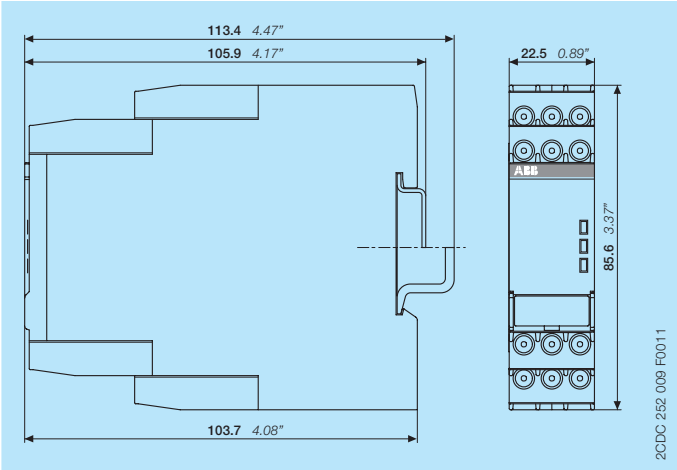

Accessories

in **mm** and *inches*

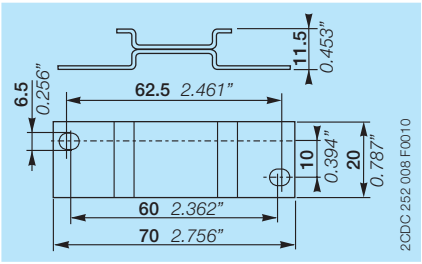

ADP.01 - Adapter for screw mounting

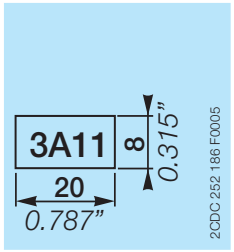

MAR.01 - Marker label for devices without DIP switches

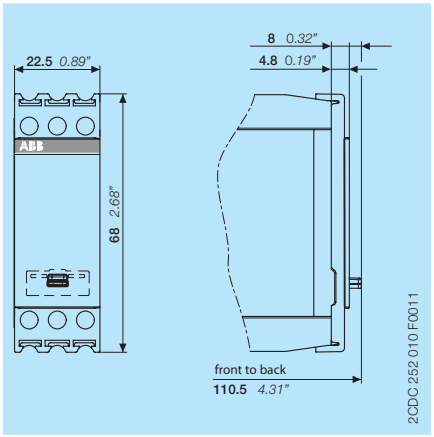

COV.11 - Sealable transparent cover

Further documentation

Document title	Document type	Document number
Electronic products and relays	Technical catalogue	2CDC 110 004 C020x
CM-PAS, CM-PFS, CM-PSS, CM-PVS	Instruction manual	1SVC 730 510 M0000

You can find the documentation on the internet at www.abb.com/lowvoltage -> Control Products -> Electronic Relays and Controls -> Three Phase Monitors.

Contact us

ABB STOTZ-KONTAKT GmbH
P. O. Box 10 16 80
69006 Heidelberg, Germany
Phone: +49 (0) 6221 7 01-0
Fax: +49 (0) 6221 7 01-13 25
E-mail: info.desto@de.abb.com

You can find the address of your
local sales organisation on the
ABB home page
http://www.abb.com/contacts
-> Low Voltage Products and Systems

Document number 2CDC 112 178 D0201 (07.2012)

Note:
We reserve the right to make technical changes or modify the contents of this document without prior notice. With regard to purchase orders, the agreed particulars shall prevail. ABB AG does not accept any responsibility whatsoever for potential errors or possible lack of information in this document.

We reserve all rights in this document and in the subject matter and illustrations contained therein. Any reproduction, disclosure to third parties or utilization of its contents – in whole or in parts – is forbidden without prior written consent of ABB AG.

Copyright© 2012 ABB
All rights reserved