# FLASHING ALARM LIGHTS 15 J
# ABL/ABS



The powerful flashing light in a metal housing.

- Designed for alarm functions outdoors and in large halls and plants.
- Also available with GL approval.
- Housing and fixing bracket made of sturdy anodised aluminium.
- Aggressive environmental conditions or driving rain cannot damage the light.
- Impact-proof lens.
- Ideally suited for tough industrial environments.
- Flash tube additionally secured by a steel clamp.

IP 54
protection system

+55 °C
–40 °C
operating temperature

EAC

| PRODUCT AC | ABL | | | | | |
|---|---|---|---|---|---|---|
| DATA | | | | | | |
| Rated voltage | 230 V<br>AC 50 I 60 Hz | 127 V<br>AC 50 I 60 Hz | 110 V<br>AC 50 I 60 Hz | 48 V<br>AC 50 I 60 Hz | 42 V<br>AC 50 I 60 Hz | 24 V<br>AC 50 I 60 Hz |
| Operating range | 185–255 V | 108–140 V | 95–127 V | 40–54 V | 35–50 V | 20–30 V |
| Nominal current consumption | 0.18 A | 0.25 A | 0.33 A | 0.69 A | 0.78 A | 1.29 A |

| PRODUCT DC | ABS | | | | |
|---|---|---|---|---|---|
| DATA | | | | | |
| Rated voltage | 60 V DC | 48 V DC | 36 V DC | 24 V DC | 12 V DC |
| Operating range | 50–72 V | 40–60 V | 29–43 V | 18–30 V | 10–15 V |
| Nominal current consumption | 0.26 A | 0.35 A | 0.55 A | 0.7 A | 1.5 A |

| PRODUCT | | ABL | ABS |
|---|---|---|---|
| Flash rate | | 1 Hz = 60 flashes/min | |
| Flash energy | | 15 J | |
| Light intensity (DIN 5037) [1] | | 226 cd | |
| Max. viewing distance | | 348 m | |
| Operating temperature | | –40 °C ... +55 °C | |
| Storage temperature | | –40 °C ... +70 °C | |
| Relative humidity | | 90 % | |
| Protection system (EN 60529) | | IP 54 (vertical mounting) | |
| Duty cycle | | 100 % | |
| Service life of the light source | | light emission still 70 % after 8,000,000 flashes | |
| Material | lens | ⊘ ○ ● ● ● ● ● polycarbonate (PC) | |
| | housing | aluminium (Al Mg Si 1), yellow anodised | |
| | base | polycarbonate (PC) with fibre glass | |
| Cable entry | | M20x 1.5 | |
| Connecting terminal | | single wire 0.5–2.5 mm², fine wire 0.5–1.5 mm², with cable end sleeves DIN 46228/1 | |
| Weight | | 650 g | 800 g |

[1] with a clear lens

## DIMENSIONS

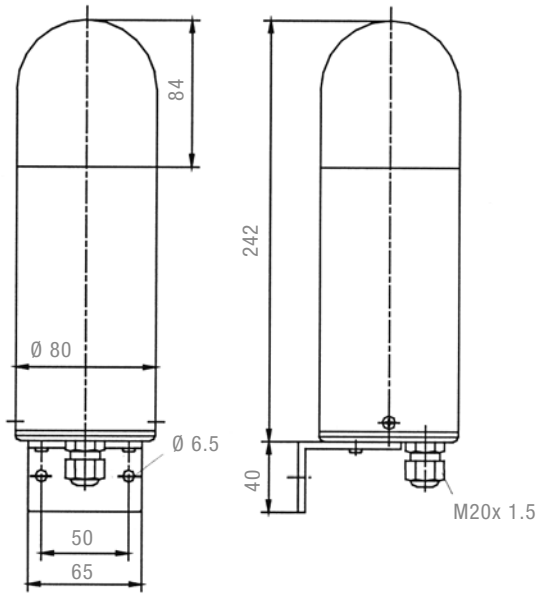


## CONNECTION DIAGRAM

| ABL | ABS |
|---|---|

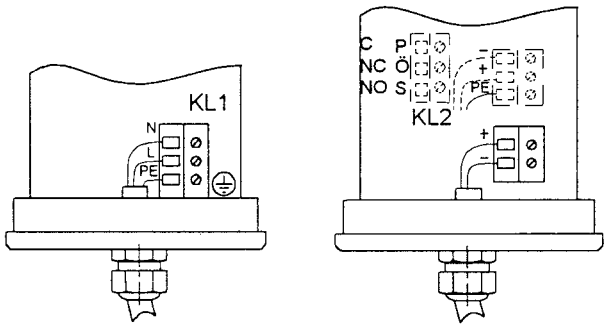


| ARTICLE NO. | ABL | | ABS |
|---|---|---|---|
| LENS COLOUR | 230 V AC | 110 V AC | 24 V DC |
| | 21001103000 | 21001163000 | 21001803000 |
| | 21001104000 | 21001164000 | 21001804000 |
| | 21001105000 | 21001165000 | 21001805000 |

Article numbers for other colours and voltages on request.

## OPTIONS/ACCESSORIES









**Article no.**
**28710500042**

## CONFORMITY TO STANDARDS

The visual characteristics of flashing lights conform to the European standard DIN EN 842; **“Machine safety – visual alarm signals”.**
Requirements contained in the DIN EN 981 standard; **“Machine safety – system of acoustic and visual alarm and information signals”,** can be fulfilled.

The colours “red” for the emergency signal and “yellow” for the warning signal conform to the requirements of IEC 73 / DIN EN 60073 / VDE 0199; **“Coding of display devices and control elements using colours and supplementary means”.**

References to visual alarm devices can be found in the following standards:

| | |
|---|---|
| EN 60825-1 | Radiation safety of laser devices, identical to IEC 825 and DIN-VDE 0837 |
| DIN EN 54 | Fire alarm systems |
| DIN 54113-2 | Radiation protection regulations for the technical operation of X-ray equipment up to 500 kV |