Current Transducer FRS-Sxx I_{PN} = 1000 A ... 3000 A

Ref: FRS 1000-Sxx, FRS 1500-Sxx, FRS 2000-Sxx, FRS 2500-Sxx, FRS 3000-Sxx

For the electronic measurement of current: DC, AC, pulsed..., with galvanic separation between the primary and the secondary circuit.



Features

- Hall effect **O**pen **L**oop **C**oreless **I**ntegral current transducer
- Uni- or Bi-directional [1] measurement of primary current up to 9000 A
- Instantaneous 0-5 V voltage output
- Power supply +12 or +24 V DC
- Galvanic separation between primary and secondary circuit
- Factory calibrated
- High bandwidth > 1 MHz
- Very low delay time < 200 ns.

Advantages

- Wide measurement range
- No magnetic offset
- Low consumption and low losses
- Wide range of rectangular busbar dimensions
- Light weight design
- M12 field connector.

Applications

- Wind turbine power converter
- Electrolyser
- High power drives.

Standards

- IEC 62477-1: 2022
- IEC 61800-5-1: 2022
- IEC 62109-1: 2010
- IEC 61010-1: 2010
- EN 50155: 2021
- IEC 61992-7-2: 2006
- IEC 61010-2-030: 2017
- UL 61010-1: 3ED 2022.

Application Domains

- Industrial
- Traction
- Trackside.

Note: [1] see reference table on page 12.

LEM International SA
Route du Nant-d'Avril, 152
1217 Meyrin
www.lem.com

Safety



Caution

Ignoring the warnings can lead to serious injury and/or cause damage. The current transducer may only be installed and put into operation by qualified personnel that have received and appropriate training on applicable safety precautions.
If the device is used in a way that is not specified by the manufacturer, the protection provided by the device may be compromised.
Always inspect the transducer and connecting cable before using this product and do not use it if damaged.
The installation shall guarantee the maximum primary conductor temperature, respect clearance and creepage distances, minimize electric and magnetic coupling. Unless otherwise specified the transducer can be mounted in any orientation using its mounting holes. Primary conductors should not exert any force on the transducer.



Caution, risk of electrical shock

This transducer must be used in limited-energy secondary circuits SELV according to IEC 61010-1, in electric/electronic equipment with respect to applicable standards and safety requirements in accordance with the manufacturer's operating specifications.

Use caution during installation and use of this product; certain parts of the module can carry hazardous voltages and high currents (e.g. power supply, primary conductor).
Ignoring this warning can lead to injury and/or cause serious damage.
De-energize all circuits and hazardous live parts before installing the product.
All installations, maintenance, servicing operations and use must be carried out by trained and qualified personnel practicing applicable safety precautions.

This transducer is a build-in device, whose hazardous live parts must be inaccessible after installation.
This transducer must be mounted in a suitable end-enclosure.
Besides make sure to have a distance of minimum 30 mm between the primary terminals of the transducer and other neighboring components.

Main supply must be able to be disconnected.
Never connect or disconnect the external power supply while the primary circuit is connected to live parts.
Always wear protective clothing and gloves if hazardous live parts are present in the installation where the measurement is carried out.
This transducer is a built-in device, not intended to be cleaned with any product. Nevertheless if the user must implement cleaning or washing process, validation of the cleaning program has to be done by himself.

Do not dispose of this product as unsorted municipal waste.
Contact a qualified recycler for disposal.

This product is intended to be powered by a Limited Power Source (see note [1)]) in accordance with clause 9.4 or IEC 61010-1.
The external power supply must comply with the LPS requirements to ensure safe operation.
Use of non-LPS power sources may void safety compliance.

Note: [1)] Limited Power Source (LPS) is a power supply that is designed to limit output under both normal and fault conditions. It typically provides:
- A maximum output of ≤ 100 VA
- Safety Extra Low Voltage (SELV) levels (e.g., ≤ 60 V DC)
- Current limiting to prevent hazardous energy levels.

LEM International SA
Route du Nant-d'Avril, 152
1217 Meyrin
www.lem.com

Absolute maximum ratings

Parameter	Symbol	Unit	Value
Maximum supply voltage (not destructive)	$\pm U_{C\,max}$	V	−0.3 ... 32 V DC
Maximum primary conductor temperature	$T_{B\,max}$	°C	105
Electrostatic discharge voltage (HBM - Human Body Model)	$U_{ESD\,HBM}$	kV	2

Absolute maximum ratings apply at 25 °C unless otherwise noted.
Stresses above these ratings may cause permanent damage.
Exposure to absolute maximum ratings for extended periods may degrade reliability.

UL 61010: Standards and marking

File # E330077-D1008-1/A0/C0-UL

Standards

- UL 61010-1, 3rd Edition, May 11, 2012, Revised July 19, 2019, CAN/CSAC22.2
- IEC 61010-2-030: 2017 (Second Edition).

Marking

Only those products bearing the UL or UR Mark should be considered to be Listed or Recognized and covered under UL's Follow-Up Service. Always look for the Mark on the product.

Insulation coordination

Parameter	Symbol	Unit	Value	Comment
RMS voltage for AC insulation test, 50 Hz, 1 min	U_d	kV	12	
Impulse withstand voltage 1.2/50 µs	U_{Ni}	kV	44	
RMS voltage for AC insulation routine test, 50 Hz, 2"		kV	5.3	Industry application [1]
RMS voltage for AC insulation routine test, 50 Hz, 5"		kV	18.5	Traction application [1]
Partial discharge RMS type test voltage (q_m< 10 pC)	$U_{PD\,t}$	V	2480	Primary/Secondary Industry application [1] [2]
Partial discharge RMS type test voltage (q_m< 10 pC)	$U_{PD\,t}$	V	4840	Primary/Secondary Traction application [1] [2]
Minimum clearance (pri. - sec.)	d_{Cl}	mm	> 72	Shortest distance through air
Minimum creepage distance (pri. - sec.)	d_{Cp}	mm	> 100	Shortest path along device body
Case material	-	-	V0	According to UL 94
Comparative tracking index	CTI		600	
Application example Industry Working voltage		V	1500	Reinforced insulation non-uniform According to: IEC 61800-5-1, CAT III PD2 IEC 62477-1, CAT IV PD3
			1000	IEC 61010-1, CAT IV PD3
Application example Trackside/Traction Nominal voltage Rated insulation voltage	U_N U_{Nm}	V	3000 3600/3700	Reinforced insulation non-uniform According to: IEC 62497-1, CAT III PD3

Environmental and mechanical characteristics

Parameter	Symbol	Unit	Min	Typ	Max	Comment
Ambient operating temperature	T_A	°C	−40		+85	
Ambient storage temperature	$T_{A\,st}$	°C	−40		+90	
Mass	m	g		472		

Notes: [1] See reference table on page 12
[2] Garanteed with a centered busbar of 104 x 22 mm maximum dimension with an edge chamfer of 1.5 mm or any other shape and layout providing a minimum clearance of 3 mm between the bare metal and the inner wall of the transducer.

LEM International SA
Route du Nant-d'Avril, 152
1217 Meyrin
www.lem.com

Electrical data FRS 1000-Sxx

At T_A = 25 °C, U_C = +24 V, R_L = 10 kΩ, unless otherwise noted (see Min, Max, typ, definition paragraph in page 9).

Parameter	Symbol	Unit	Min	Typ	Max	Comment
Primary nominal current	I_{PN}	A		1000		See [1]
Primary current, measuring range	I_{PM}	A	−3000 0		3000 3000	Sx version SUx version
Supply voltage	U_C	V	10	12 or 24	28	See [2]
Current consumption	I_C	mA		100 60	140 80	@ U_C = 12 V DC @ U_C = 24 V DC
Output reference voltage	U_{ref} − 0 V	V	2.48 2.48	2.5 2.5	2.55 2.53	@ U_C = 12 V @ U_C = 24 V
U_{ref} output resistance	R_{ref}	Ω	16	25	38	
U_{out} output resistance	R_{out}	Ω		10		
Output voltage range @ $\pm I_{PM}$ Sx version [3] @ 0 ... I_{PM} SUx version	$U_{out} - U_{ref}$	V	−2		2	Sx version $U_{out} - U_{ref}$ = 0 V @ I_P = 0 SUx version $U_{out} - U_{ref}$ = −2 V @ I_P=0
Load capacitance	C_L	nF		10		
Electrical offset current referred to primary	I_{OE}	A	−4.5		4.5	
Nominal sensitivity	S_N	mV/A		0.667 1.333		Sx version SUx version
Magnetic offset current (@ I_{PN}) referred to primary	I_{OM}	A		none		No magnetic core inside, OLCI technology
Linearity error 0 ... I_{PM}	ε_L	% of I_{PM}	−0.35		0.35	
Temperature coefficient of U_{ref}	TCU_{ref}	ppm/K		±80		−40 °C ... +85 °C
Temperature coefficient of I_{OE}	TCI_{OE}	mA/K	−240		240	−40 °C ... +85 °C
Temperature coefficient of S	TCS	ppm/K	−120		120	−40 °C ... +85 °C
Sum of sensitivity & Linearity error 0 ... I_{PM}	ε_{SL}	% of I_{PM}		±0.5		Primary busbar centered No return busbar considered [4] [6]
Sensitivity over lifetime drift	$\Delta S/S_N$	%			1.7	Worst case after reliability tests [4] [6]
Total error @ 25 °C @ I_P = 0 @ I_P = $\pm I_{PM}$	ε_{tot}	% of I_{PM}	−0.15 −0.65		0.15 0.65	Primary busbar centered No return busbar considered [4] [6]
Total error @ −40 °C @ I_P = 0 @ I_P = $\pm I_{PM}$	ε_{tot}	% of I_{PM}	−0.54 −1.25		0.54 1.25	Primary busbar centered No return busbar considered [4] [6]
Total error @ 85 °C @ I_P = 0 @ I_P = $\pm I_{PM}$	ε_{tot}	% of I_{PM}	−0.50 −1.19		0.50 1.19	Primary busbar centered No return busbar considered [4] [6]
Delay time @ 10 % of the final output value I_{PN} step	t_{D10}	µs			0.2	@ 100 A/µs
Delay time @ 90 % of the final output value I_{PN} step	t_{D90}	µs			0.2	@ 100 A/µs
Frequency bandwidth (−3 dB)	BW	kHz		1000		See [5]
RMS noise current spectral density referred to primary 100 Hz ... 100 kHz 100 kHz ... 1 MHz	i_{no}	mA/√Hz			18.9 & 37.7 0.8 & 1.5	FRS xxx-S & FRS xxx-SU
Peak to peak noise current referred to primary: up to 10 kHz up to 100 kHz up to 1 MHz	$I_{no\ pp}$	A		1.7 & 3.4 2.2 & 4.5 2.5 & 5.0		FRS xxx-S & FRS xxx-SU

Notes:
[1] This low power coreless transducer may accept up to $I_{P\ max}$ permanent current; at the only condition of respecting the maximum primary conductor temperature (105 °C)
[2] Above 28 V, accuracy performance may change irremediably
[3] Rounded, actual value is obtained by the following formula: $\pm I_{PM} \times S_N$
[4] See page 11 typical influence of the return busbar regarding its position
[5] The maximum admissible couple of (I_{PM} and frequency) is specified on page 10
[6] For more information contact LEM sales organization.

26August2025/Version 5 (Public datasheet)

LEM International SA
Route du Nant-d'Avril, 152
1217 Meyrin
www.lem.com

Electrical data FRS 1500-Sxx

At T_A = 25 °C, U_C = +24 V, R_L = 10 kΩ, unless otherwise noted (see Min, Max, typ, definition paragraph in page 9).

Parameter	Symbol	Unit	Min	Typ	Max	Comment
Primary nominal current	I_{PN}	A		1500		See [1]
Primary current, measuring range	I_{PM}	A	−4500 0		4500 4500	Sx version SUx version
Supply voltage	U_C	V	10	12 or 24	28	See [2]
Current consumption	I_C	mA		100 60	140 80	@ U_C = 12 V DC @ U_C = 24 V DC
Output reference voltage	U_{ref} − 0 V	V	2.48 2.48	2.5 2.5	2.55 2.53	@ U_C = 12 V @ U_C = 24 V
U_{ref} output resistance	R_{ref}	Ω	16	25	38	
U_{out} output resistance	R_{out}	Ω		10		
Output voltage range @ ±I_{PM} Sx version [3] @ 0 ... I_{PM} SUx version	$U_{out} - U_{ref}$	V	−2		2	Sx version $U_{out} - U_{ref}$ = 0 V @ I_P = 0 SUx version $U_{out} - U_{ref}$ = −2 V @ I_P = 0
Load capacitance	C_L	nF		10		
Electrical offset current referred to primary	I_{OE}	A	−6.8		6.8	
Nominal sensitivity	S_N	mV/A		0.444 0.889		Sx version SUx version
Magnetic offset current (@ I_{PN}) referred to primary	I_{OM}	A		none		No magnetic core inside, OLCI technology
Linearity error 0 ... I_{PM}	ε_L	% of I_{PM}	−0.35		0.35	
Temperature coefficient of U_{ref}	TCU_{ref}	ppm/K		±80		−40 °C ... +85 °C
Temperature coefficient of I_{OE}	TCI_{OE}	mA/K	−360		360	−40 °C ... +85 °C
Temperature coefficient of S	TCS	ppm/K	−120		120	−40 °C ... +85 °C
Sum of sensitivity & Linearity error 0 ... I_{PM}	ε_{SL}	% of I_{PM}		±0.5		Primary busbar centered No return busbar considered [4] [6]
Sensitivity over lifetime drift	$\Delta S/S_N$	%			1.7	Worst case after reliability tests [4] [6]
Total error @ 25 °C @ I_P = 0 @ I_P = ±I_{PM}	ε_{tot}	% of I_{PM}	−0.15 −0.65		0.15 0.65	Primary busbar centered No return busbar considered [4] [6]
Total error @ −40 °C @ I_P = 0 @ I_P = ±I_{PM}	ε_{tot}	% of I_{PM}	−0.54 −1.25		0.54 1.25	Primary busbar centered No return busbar considered [4] [6]
Total error @ 85 °C @ I_P = 0 @ I_P = ±I_{PM}	ε_{tot}	% of I_{PM}	−0.50 −1.19		0.50 1.19	Primary busbar centered No return busbar considered [4] [6]
Delay time @ 10 % of the final output value I_{PN} step	t_{D10}	µs			0.2	@ 100 A/µs
Delay time @ 90 % of the final output value I_{PN} step	t_{D90}	µs			0.2	@ 100 A/µs
Frequency bandwidth (−3 dB)	BW	kHz		1000		See [5]
RMS noise current spectral density referred to primary 100 Hz ... 100 kHz 100 kHz ... 1 MHz	i_{no}	mA/√Hz			37.8&75.7 0.9&1.9	FRS xxx-S & FRS xxx-SU
Peak to peak noise current referred to primary: up to 10 kHz up to 100 kHz up to 1 MHz	$I_{no\ pp}$	A		2.3 & 4.6 2.8 & 5.6 3.1 & 6.3		FRS xxx-S & FRS xxx-SU

Notes:
[1] This low power coreless transducer may accept up to $I_{P\ max}$ permanent current; at the only condition of respecting the maximum primary conductor temperature (105 °C)
[2] Above 28 V, accuracy performance may change irremediably
[3] Rounded, actual value is obtained by the following formula: ±I_{PM} × S_N
[4] See page 11 typical influence of the return busbar regarding its position
[5] The maximum admissible couple of (I_{PM} and frequency) is specified on page 10
[6] For more information contact LEM sales organization.

26August2025/Version 5 (Public datasheet)

LEM International SA
Route du Nant-d'Avril, 152
1217 Meyrin
www.lem.com

Electrical data FRS 2000-Sxx

At T_A = 25 °C, U_C = +24 V, R_L = 10 kΩ, unless otherwise noted (see Min, Max, typ, definition paragraph in page 9).

Parameter	Symbol	Unit	Min	Typ	Max	Comment
Primary nominal current	I_{PN}	A		2000		See [1]
Primary current, measuring range	I_{PM}	A	−6000 0		6000 6000	Sx version SUx version
Supply voltage	U_C	V	10	12 or 24	28	See [2]
Current consumption	I_C	mA		100 60	140 80	@ U_C = 12 V DC @ U_C = 24 V DC
Output reference voltage	U_{ref} − 0 V	V	2.48 2.48	2.5 2.5	2.55 2.53	@ U_C = 12 V @ U_C = 24 V
U_{ref} output resistance	R_{ref}	Ω	16	25	38	
U_{out} output resistance	R_{out}	Ω		10		
Output voltage range @ $\pm I_{PM}$ Sx version [3] @ 0 ... I_{PM} SUx version	$U_{out} - U_{ref}$	V	−2		2	Sx version $U_{out} - U_{ref}$ = 0 V @ I_P = 0 SUx version $U_{out} - U_{ref}$ = −2 V @ I_P=0
Load capacitance	C_L	nF		10		
Electrical offset current referred to primary	I_{OE}	A	−9		9	
Nominal sensitivity	S_N	mV/A		0.333 0.667		Sx version SUx version
Magnetic offset current (@ I_{PN}) referred to primary	I_{OM}	A		none		No magnetic core inside, OLCI technology
Linearity error 0 ... I_{PM}	ε_L	% of I_{PM}	−0.35		0.35	
Temperature coefficient of U_{ref}	TCU_{ref}	ppm/K		±80		−40 °C ... +85 °C
Temperature coefficient of I_{OE}	TCI_{OE}	mA/K	−480		480	−40 °C ... +85 °C
Temperature coefficient of S	TCS	ppm/K	−120		120	−40 °C ... +85 °C
Sum of sensitivity & Linearity error 0 ... I_{PM}	ε_{SL}	% of I_{PM}		±0.5		Primary busbar centered No return busbar considered [4] [6]
Sensitivity over lifetime drift	$\Delta S/S_N$	%			1.7	Worst case after reliability tests [4] [6]
Total error @ 25 °C @ I_P = 0 @ $I_P = \pm I_{PM}$	ε_{tot}	% of I_{PM}	−0.15 −0.65		0.15 0.65	Primary busbar centered No return busbar considered [4] [6]
Total error @ −40 °C @ I_P = 0 @ $I_P = \pm I_{PM}$	ε_{tot}	% of I_{PM}	−0.54 −1.25		0.54 1.25	Primary busbar centered No return busbar considered [4] [6]
Total error @ 85 °C @ I_P = 0 @ $I_P = \pm I_{PM}$	ε_{tot}	% of I_{PM}	−0.50 −1.19		0.50 1.19	Primary busbar centered No return busbar considered [4] [6]
Delay time @ 10 % of the final output value I_{PN} step	t_{D10}	µs			0.2	@ 100 A/µs
Delay time @ 90 % of the final output value I_{PN} step	t_{D90}	µs			0.2	@ 100 A/µs
Frequency bandwidth (−3 dB)	BW	kHz		1000		See [5]
RMS noise current spectral density referred to primary 100 Hz ... 100 kHz 100 kHz ... 1 MHz	i_{no}	mA/√Hz			47.3&94.5 1.0&2.1	FRS xxx-S & FRS xxx-SU
Peak to peak noise current referred to primary: up to 10 kHz up to 100 kHz up to 1 MHz	$I_{no\ pp}$	A		2.6 & 5.2 3.1 & 6.2 3.5 & 6.9		FRS xxx-S & FRS xxx-SU

Notes:
[1] This low power coreless transducer may accept up to $I_{P\ max}$ permanent current; at the only condition of respecting the maximum primary conductor temperature (105 °C)
[2] Above 28 V, accuracy performance may change irremediably
[3] Rounded, actual value is obtained by the following formula: $\pm I_{PM} \times S_N$
[4] See page 11 typical influence of the return busbar regarding its position
[5] The maximum admissible couple of (I_{PM} and frequency) is specified on page 10
[6] For more information contact LEM sales organization.

LEM International SA
Route du Nant-d'Avril, 152
1217 Meyrin
www.lem.com

Electrical data FRS 2500-Sxx

At T_A = 25 °C, U_C = +24 V, R_L = 10 kΩ, unless otherwise noted (see Min, Max, typ, definition paragraph in page 9).

Parameter	Symbol	Unit	Min	Typ	Max	Comment
Primary nominal current	I_{PN}	A		2500		See [1]
Primary current, measuring range	I_{PM}	A	−7500 0		7500 7500	Sx version SUx version
Supply voltage	U_C	V	10	12 or 24	28	See [2]
Current consumption	I_C	mA		100 60	140 80	@ U_C = 12 V DC @ U_C = 24 V DC
Output reference voltage	U_{ref} − 0 V	V	2.48 2.48	2.5 2.5	2.55 2.53	@ U_C = 12 V @ U_C = 24 V
U_{ref} output resistance	R_{ref}	Ω	16	25	38	
U_{out} output resistance	R_{out}	Ω		10		
Output voltage range @ $\pm I_{PM}$ Sx version [3] @ 0 ... I_{PM} SUx version	$U_{out} - U_{ref}$	V	−2		2	Sx version $U_{out} - U_{ref}$ = 0 V @ I_P = 0 SUx version $U_{out} - U_{ref}$ = −2 V @ I_P = 0
Load capacitance	C_L	nF		10		
Electrical offset current referred to primary	I_{OE}	A	−11.3		11.3	
Nominal sensitivity	S_N	mV/A		0.267 0.533		Sx version SUx version
Magnetic offset current (@ I_{PN}) referred to primary	I_{OM}	A		none		No magnetic core inside, OLCI technology
Linearity error 0 ... I_{PM}	ε_L	% of I_{PM}	−0.35		0.35	
Temperature coefficient of U_{ref}	TCU_{ref}	ppm/K		±80		−40 °C ... +85 °C
Temperature coefficient of I_{OE}	TCI_{OE}	mA/K	−600		600	−40 °C ... +85 °C
Temperature coefficient of S	TCS	ppm/K	−120		120	−40 °C ... +85 °C
Sum of sensitivity & Linearity error 0 ... I_{PM}	ε_{SL}	% of I_{PM}		±0.5		Primary busbar centered No return busbar considered [4] [6]
Sensitivity over lifetime drift	$\Delta S/S_N$	%				Worst case after reliability tests [4] [6]
Total error @ 25 °C @ I_P = 0 @ $I_P = \pm I_{PM}$	ε_{tot}	% of I_{PM}	−0.15 −0.65		0.15 0.65	Primary busbar centered No return busbar considered [4] [6]
Total error @ −40 °C @ I_P = 0 @ $I_P = \pm I_{PM}$	ε_{tot}	% of I_{PM}	−0.54 −1.25		0.54 1.25	Primary busbar centered No return busbar considered [4] [6]
Total error @ 85 °C @ I_P = 0 @ $I_P = \pm I_{PM}$	ε_{tot}	% of I_{PM}	−0.50 −1.19		0.50 1.19	Primary busbar centered No return busbar considered [4] [6]
Delay time @ 10 % of the final output value I_{PN} step	t_{D10}	µs			0.2	@ 100 A/µs
Delay time @ 90 % of the final output value I_{PN} step	t_{D90}	µs			0.2	@ 100 A/µs
Frequency bandwidth (−3 dB)	BW	kHz		1000		See [5]
RMS noise current spectral density referred to primary 100 Hz ... 100 kHz 100 kHz ... 1 MHz	i_{no}	mA/√Hz			52.9 &105.8 1.1 & 2.2	FRS xxx-S & FRS xxx-SU
Peak to peak noise current referred to primary: up to 10 kHz up to 100 kHz up to 1 MHz	$I_{no\ pp}$	A		2.8 & 5.5 3.3 & 6.5 3.6 & 7.3		FRS xxx-S & FRS xxx-SU

Notes:
[1] This low power coreless transducer may accept up to $I_{P\ max}$ permanent current; at the only condition of respecting the maximum primary conductor temperature (105 °C)
[2] Above 28 V, accuracy performance may change irremediably
[3] Rounded, actual value is obtained by the following formula: $\pm I_{PM} \times S_N$
[4] See page 11 typical influence of the return busbar regarding its position
[5] The maximum admissible couple of (I_{PM} and frequency) is specified on page 10
[6] For more information contact LEM sales organization.

26August2025/Version 5 (Public datasheet)

LEM International SA
Route du Nant-d'Avril, 152
1217 Meyrin
www.lem.com

Electrical data FRS 3000-Sxx

At T_A = 25 °C, U_C = +24 V, R_L = 10 kΩ, unless otherwise noted (see Min, Max, typ, definition paragraph in page 9).

Parameter	Symbol	Unit	Min	Typ	Max	Comment
Primary nominal current	I_{PN}	A		3000		See [1]
Primary current, measuring range	I_{PM}	A	−9000 0		9000 9000	Sx version SUx version
Supply voltage	U_C	V	10	12 or 24	28	See [2]
Current consumption	I_C	mA		100 60	140 80	@ U_C = 12 V DC @ U_C = 24 V DC
Output reference voltage	U_{ref} − 0 V	V	2.48 2.48	2.5 2.5	2.55 2.53	@ U_C = 12 V @ U_C = 24 V
U_{ref} output resistance	R_{ref}	Ω	16	25	38	
U_{out} output resistance	R_{out}	Ω		10		
Output voltage range @ $\pm I_{PM}$ Sx version [3] @ 0 ... I_{PM} SUx version	$U_{out} - U_{ref}$	V	−2		2	Sx version $U_{out} - U_{ref}$ = 0 V @ I_P = 0 SUx version $U_{out} - U_{ref}$ = −2 V @ I_P=0
Load capacitance	C_L	nF		10		
Electrical offset current referred to primary	I_{OE}	A	−13.5		13.5	
Nominal sensitivity	S_N	mV/A		0.222 0.444		Sx version SUx version
Magnetic offset current (@ I_{PN}) referred to primary	I_{OM}	A		none		No magnetic core inside, OLCI technology
Linearity error 0 ... I_{PM}	ε_L	% of I_{PM}	−0.35		0.35	
Temperature coefficient of U_{ref}	TCU_{ref}	ppm/K		±80		−40 °C ... +85 °C
Temperature coefficient of I_{OE}	TCI_{OE}	mA/K	−720		720	−40 °C ... +85 °C
Temperature coefficient of S	TCS	ppm/K	−120		120	−40 °C ... +85 °C
Sum of sensitivity & Linearity error 0 ... I_{PM}	ε_{SL}	% of I_{PM}		±0.5		Primary busbar centered No return busbar considered [4] [6]
Sensitivity over lefetime drift	$\Delta S/S_N$	%			1.7	Worst case after reliability tests [4] [6]
Total error @ 25 °C @ I_P = 0 @ $I_P = \pm I_{PM}$	ε_{tot}	% of I_{PM}	−0.15 −0.65		0.15 0.65	Primary busbar centered No return busbar considered [4] [6]
Total error @ −40 °C @ I_P = 0 @ $I_P = \pm I_{PM}$	ε_{tot}	% of I_{PM}	−0.54 −1.25		0.54 1.25	Primary busbar centered No return busbar considered [4] [6]
Total error @ 85 °C @ I_P = 0 @ $I_P = \pm I_{PM}$	ε_{tot}	% of I_{PM}	−0.50 −1.19		0.50 1.19	Primary busbar centered No return busbar considered [4] [6]
Delay time @ 10 % of the final output value I_{PN} step	t_{D10}	µs			0.2	@ 100 A/µs
Delay time @ 90 % of the final output value I_{PN} step	t_{D90}	µs			0.2	@ 100 A/µs
Frequency bandwidth (−3 dB)	BW	kHz		1000		See [5]
RMS noise current spectral density referred to primary 100 Hz ... 100 kHz 100 kHz ... 1 MHz	i_{no}	mA/√Hz			56.7 & 113.4 1.1 & 2.3	FRS xxx-S & FRS xxx-SU
Peak to peak noise current referred to primary: up to 10 kHz up to 100 kHz up to 1 MHz	$I_{no\ pp}$	A		2.9 & 5.8 3.4 & 6.8 3.8 & 7.5		FRS xxx-S & FRS xxx-SU

Notes:
[1] This low power coreless transducer may accept up to $I_{P\ max}$ permanent current; at the only condition of respecting the maximum primary conductor temperature (105 °C)
[2] Above 28 V, accuracy performance may change irremediably
[3] Rounded, actual value is obtained by the following formula: $\pm I_{PM} \times S_N$
[4] See page 11 typical influence of the return busbar regarding its position
[5] The maximum admissible couple of (I_{PM} and frequency) is specified on page 10
[6] For more information contact LEM sales organization.

LEM International SA
Route du Nant-d'Avril, 152
1217 Meyrin
www.lem.com

Definition of typical, minimum and maximum values

Minimum and maximum values for specified limiting and safety conditions have to be understood as such as well as values shown in “typical” graphs.
On the other hand, measured values are part of a statistical distribution that can be specified by an interval with upper and lower limits and a probability for measured values to lie within this interval.
Unless otherwise stated (e.g. “100 % tested”), the LEM definition for such intervals designated with “min” and “max” is that the probability for values of samples to lie in this interval is 99.73 %.
For a normal (Gaussian) distribution, this corresponds to an interval between −3 sigma and +3 sigma. If “typical” values are not obviously mean or average values, those values are defined to delimit intervals with a probability of 68.27 %, corresponding to an interval between −sigma and +sigma for a normal distribution.
Typical, maximal and minimal values are determined during the initial characterization of the product.

LEM International SA
Route du Nant-d’Avril, 152
1217 Meyrin
www.lem.com

Maximum admissible couple of (I_{PM} & Frequency)

Typical input/output characteristics

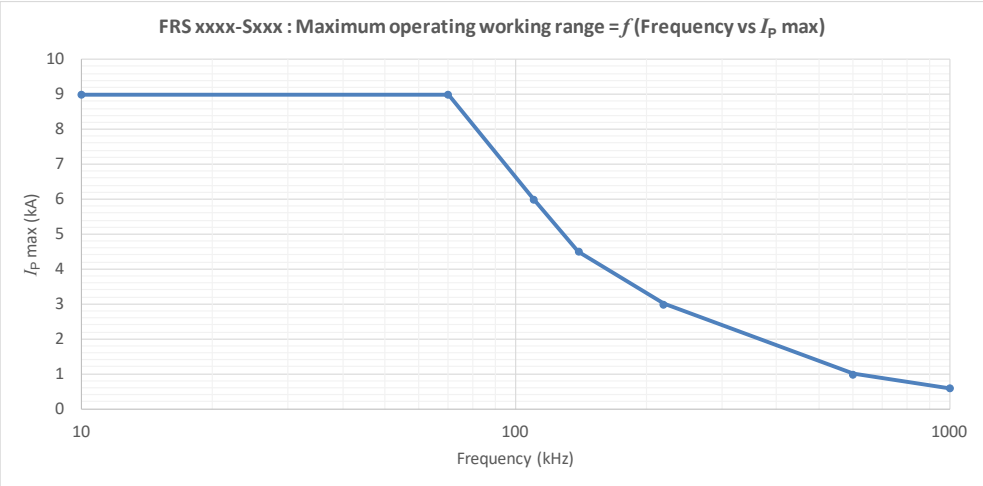

Figure 1: Bi-polar output voltage (U_{out} − U_{ref}) VS primary current I_P

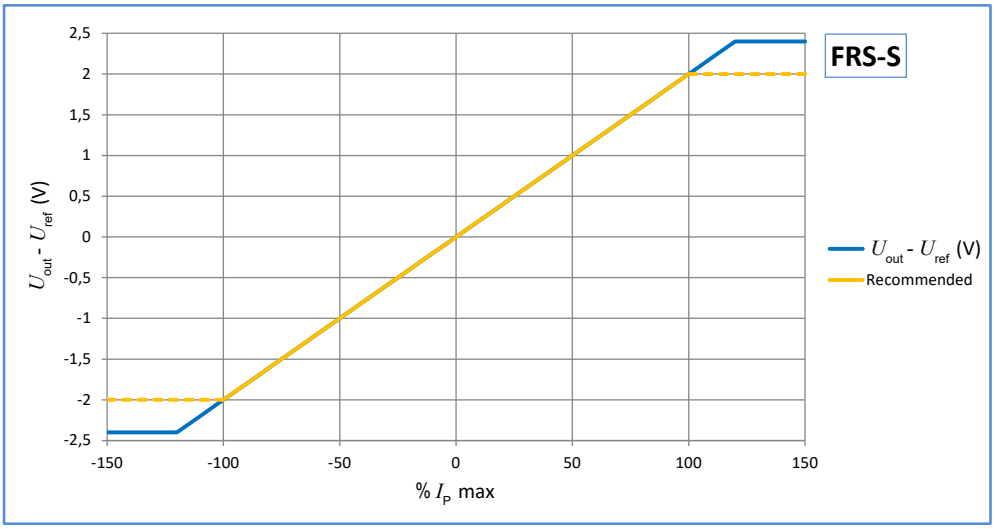

Figure 2: Uni-polar output voltage (U_{out} − U_{ref}) VS primary current I_P

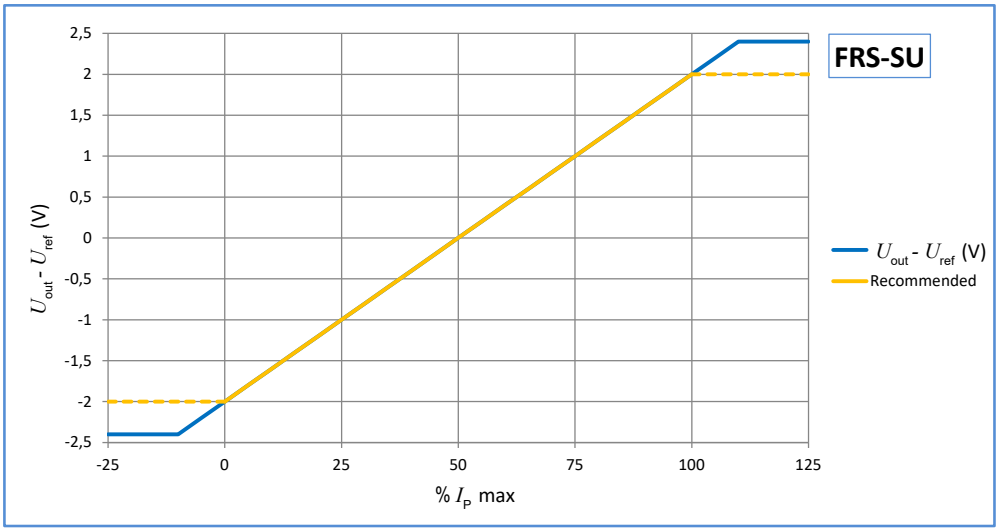

LEM International SA
Route du Nant-d'Avril, 152
1217 Meyrin
www.lem.com

Typical additional error due to return busbar layout and distance

Busbar on TOP or BOTTOM

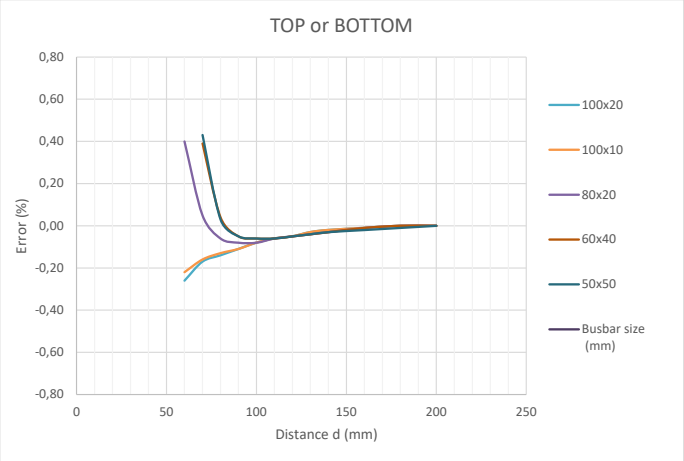

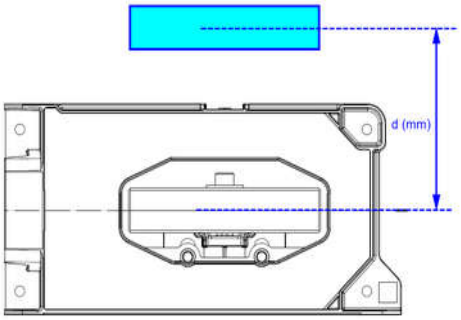

Busbar on the side (LEFT or RIGHT)

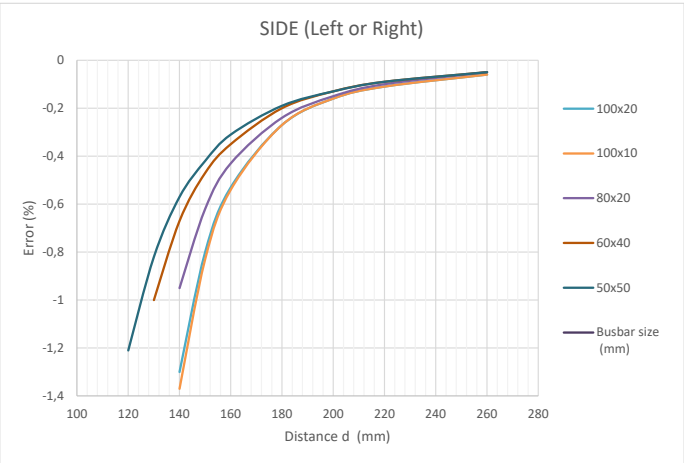

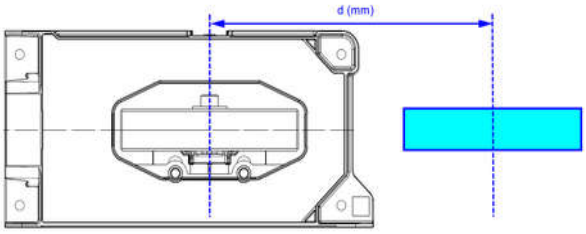

LEM International SA
Route du Nant-d'Avril, 152
1217 Meyrin
www.lem.com

FRS-Sxx series: name and codification

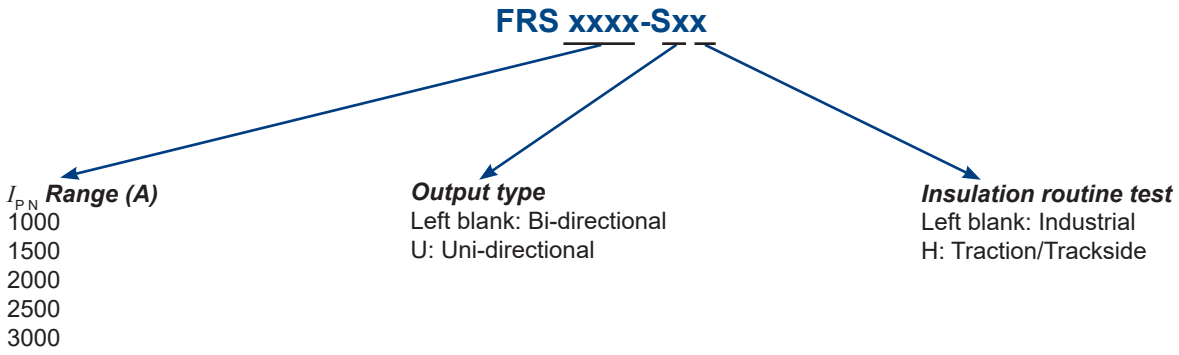

FRS-Sxx series: ordering [1)]

Name	Part numbers
FRS 1000-S	90.Y9.60.501.0
FRS 1000-SU	90.Y9.60.502.0
FRS 1500-S	90.Y9.65.503.0
FRS 1500-SU	90.Y9.65.504.0
FRS 2000-S	90.Y9.69.505.0
FRS 2000-SU	90.Y9.69.506.0
FRS 2500-S	90.Y9.70.507.0
FRS 2500-SU	90.Y9.70.508.0
FRS 3000-S	90.Y9.71.509.0
FRS 3000-SU	90.Y9.71.510.0
FRS 1000-SH	90.Y9.60.511.0
FRS 1000-SUH	90.Y9.60.512.0
FRS 1500-SH	90.Y9.65.513.0
FRS 1500-SUH	90.Y9.65.514.0
FRS 2000-SH	90.Y9.69.515.0
FRS 2000-SUH	90.Y9.69.516.0
FRS 2500-SH	90.Y9.70.517.0
FRS 2500-SUH	90.Y9.70.518.0
FRS 3000-SH	90.Y9.71.519.0
FRS 3000-SUH	90.Y9.71.520.0

Note: [1)] This is an exhaustive list, to date some references may not yet exist, please contact your local LEM's sales support.

LEM International SA
Route du Nant-d'Avril, 152
1217 Meyrin
www.lem.com

Dimensions (in mm)

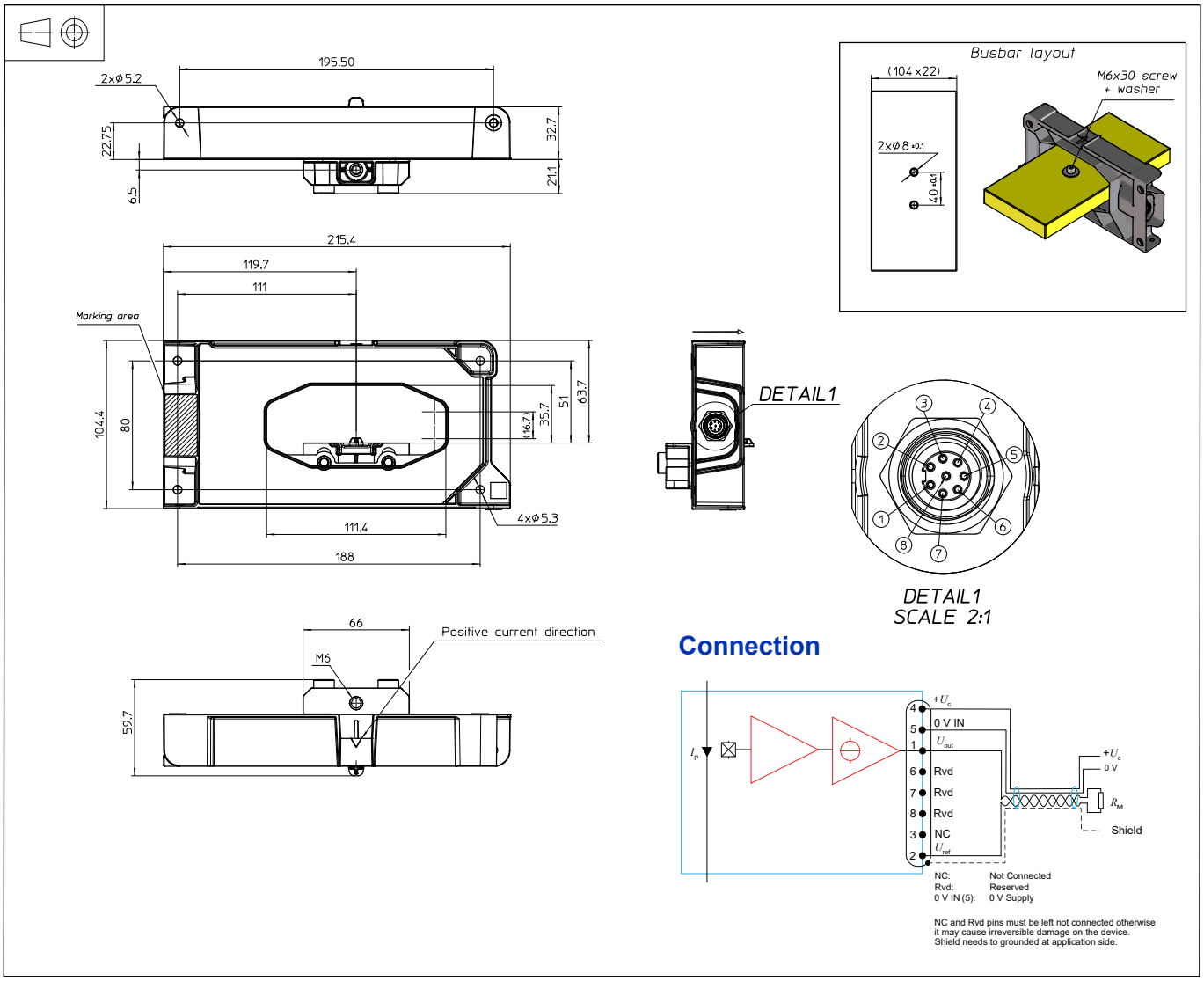

Connection

Mechanical characteristics

• General tolerance	±1 mm
• Aperture for primary conductor	104 mm × 22 mm (max)
• Transducer fastening	
Bracket fastening	2 × M6 (supplied)
Busbar fastening	1 × M6 (not supplied)
Recommended fastening torque	6 N·m ±10 %
• Connection of secondary	
Use	M12 Male/Male, coding A, 8 terminals, shielded (example: 858-008-103RSS4 by NorComp Inc.)

Remarks

- I_{out} is positive when positive I_P flows in direction of the arrow shown on the drawing above.
- Temperature of the primary conductor should not exceed 105 °C.
- Installation of the transducer must be done unless otherwise specified on the datasheet, according to LEM Transducer Generic Mounting Rules. Please refer to LEM document N°ANE120504 available on our Web site: https://www.lem.com/en/file/3137/download

Recommandation

When primary and return busbars carry high frequency current it is highly recommanded to use a twisted signal pair (pin number 1 & 2).

LEM International SA
Route du Nant-d'Avril, 152
1217 Meyrin
www.lem.com

IMPORTANT NOTICE

The information in this document is considered accurate and reliable. However, LEM International SA and any company directly or indirectly controlled by LEM Holding SA (“LEM”) do not provide any guarantee or warranty, expressed or implied, regarding the accuracy or completeness of this information and are not liable for any consequences resulting from its use. LEM shall not be responsible for any indirect, incidental, punitive, special, or consequential damages (including, but not limited to, lost profits, lost savings, business interruption, costs related to the removal or replacement of products, or rework charges) regardless of whether such damages arise from tort (including negligence), warranty, breach of contract, or any other legal theory.

LEM reserves the right to update the information in this document, including specifications and product descriptions, at any time without prior notice. Information in this document replaces any previous versions of this document. No license to any intellectual property is granted by LEM through this document, either explicitly or implicitly. Any Information and product described herein is subject to export control regulations.

LEM products may possess either unidentified or documented vulnerabilities. It is the sole responsibility of the purchaser to design and operate their applications and products in a manner that mitigates the impact of these vulnerabilities. LEM disclaims any liability for such vulnerabilities. Customers must select products with security features that best comply with applicable rules, regulations, and standards for their intended use. The purchaser is responsible for making final design decisions regarding its products and for ensuring compliance with all legal, regulatory, and security-related requirements, irrespective of any information or support provided by LEM.

LEM products are not intended, authorized, or warranted for use in life support, life-critical, or safety-critical systems or equipment, nor in applications where failure or malfunction of an LEM product could result in personal injury, death, or significant property or environmental damage. LEM and its suppliers do not assume liability for the inclusion and/or use of LEM products in such equipment or applications; thus, this inclusion and/or use is at the purchaser’s own and sole risk. Unless explicitly stated that a specific LEM product is automotive qualified, it should not be used in automotive applications. LEM does not accept liability for the inclusion and/or use of non-automotive qualified products in automotive equipment or applications.

Applications that are described herein are for illustrative purposes only. LEM makes no representation or warranty that LEM products will be suitable for a particular purpose, a specified use or application. The purchaser is solely responsible for the design and operation of its applications and devices using LEM products, and LEM accepts no liability for any assistance with any application or purchaser product design. It is purchaser’s sole responsibility to determine whether the LEM product is suitable and fit for the purchaser’s applications and products planned, as well as for the planned application and use of purchaser’s third-party customer(s).

Stressing and using LEM products at or above limiting values will cause permanent damage to the LEM product and potentially to any device embedding or operating with LEM product. Limiting values are stress ratings only and operation of the LEM product at or above conditions and limits given in this document is not warranted. Continuous or repeated exposure to limiting values will permanently and irreversibly affect the quality and reliability of the LEM product.

LEM products are sold subject to the general terms and conditions of commercial sale, as published at www.lem.com unless otherwise agreed in a specific written agreement. LEM hereby expressly rejects the purchaser’s general terms and conditions for purchasing LEM products by purchaser. Any terms and conditions contained in any document issued by the purchaser either before or after issuance of any document by LEM containing or referring to the general terms and conditions of sale are explicitly rejected and disregarded by LEM, and the document issued by the purchaser is wholly inapplicable to any sale or licensing made by LEM and is not binding in any way on LEM.

© 2025 LEM INTERNATIONAL SA – All rights reserved

LEM International SA
Route du Nant-d’Avril, 152
1217 Meyrin
www.lem.com