268 HANDHELD CASES
292 UNIVERSAL PLASTIC ENCLOSURES
317 HEAVY DUTY AND ELECTRICAL ENCLOSURES
341 DEVELOPMENT BOARD ENCLOSURES
369 VERSATILE IOT AND SENSOR ENCLOSURES

X6 Series IP67 Electrical Knockout Enclosure - Polycarbonate

Product overview

- Screw type lid with knockouts on the base
- Moulded in high quality polycarbonate
- Pillars in the base can be used for PCB mounting or DIN rail mounting, etc.
- Gasket moulded into the enclosure lid
- Clear lid option available
- Captive, polyamide lid screws included
- Larger sizes include two brass inserts at either end of the base, suitable for DIN rails
- Wall mounting accessories available
- X6 series meets the requirements of IP67 (equivalent to NEMA 6)
- IK08 impact tested

CHDX6



SPECIFICATION	
Materials	Polycarbonate UL94-V0
Operating temperature	-40°C to + 110°C
Protection class	X6 series has been tested and meets the requirements of IP67, IK08
Standard colours	Grey, transparent lid option
Standard unit includes	Box, lid, 4 screws
Available accessories	Mount plates and wall mounts

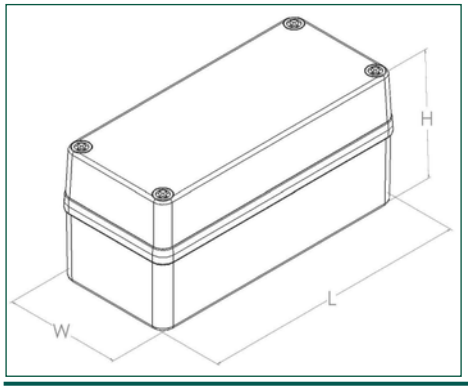

SOLID LID	CLEAR LID	LENGTH	WIDTH	HEIGHT
CHDX6-221	CHDX6-221C	110mm	80mm	70mm
CHDX6-222	CHDX6-222C	110mm	80mm	85mm
CHDX6-223	CHDX6-223C	130mm	80mm	70mm
CHDX6-224	CHDX6-224C	130mm	80mm	85mm
CHDX6-225	CHDX6-225C	180mm	80mm	70mm
CHDX6-226	CHDX6-226C	180mm	80mm	85mm
CHDX6-227	CHDX6-227C	250mm	80mm	70mm
CHDX6-228	CHDX6-228C	250mm	80mm	85mm
CHDX6-229	CHDX6-229C	175mm	127mm	75mm
CHDX6-230	CHDX6-230C	175mm	127mm	100mm

KEY FEATURES

IP67 rated enclosure | IK07/08 impact tested | Metric sized knockouts

CUSTOMISE ME · PRINTING · CUSTOMISE ME · DRILLING

bsi ISO 9001 Quality Management Systems CERTIFIED
FM 28614

+44 (0)1638 716101 | sales@camdenboss.com | www.camdenboss.com

We operate a constant improvement policy, our products are subject to change without notice.

268 HANDHELD CASES
292 UNIVERSAL PLASTIC ENCLOSURES
317 HEAVY DUTY AND ELECTRICAL ENCLOSURES
341 DEVELOPMENT BOARD ENCLOSURES
369 VERSATILE IOT AND SENSOR ENCLOSURES

X6 Series IP67 Electrical Knockout Enclosure - ABS

Product overview

- Screw type lid with knockouts on the base
- Moulded in high quality ABS
- Pillars in the base can be used for PCB mounting or DIN rail mounting, etc.
- Gasket moulded into the enclosure lid
- Clear lid option available
- Captive, polyamide lid screws included
- Larger sizes include two brass inserts at either end of the base, suitable for DIN rails
- Wall mounting accessories available
- X6 series meets the requirements of IP67 (equivalent to NEMA 6)
- IK08 impact tested

CHDX6



SPECIFICATION	
Materials	ABS UL94-HB
Operating temperature	-40°C- to + 70°C
Protection class	X6 series has been tested and meets the requirements of IP67, IK08
Standard colours	Grey, transparent lid option
Standard unit includes	Box, lid, 4 screws
Available accessories	Mount plates and wall mounts

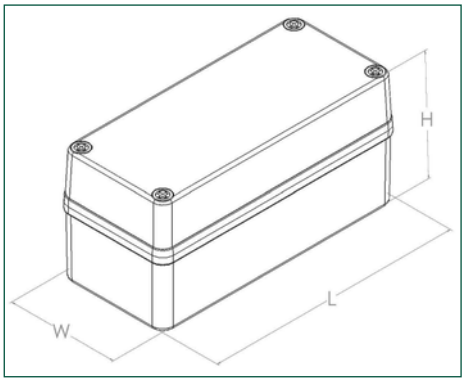

SOLID LID	CLEAR LID	LENGTH	WIDTH	HEIGHT
CHDX6-321	CHDX6-321C	110mm	80mm	70mm
CHDX6-322	CHDX6-322C	110mm	80mm	85mm
CHDX6-323	CHDX6-323C	130mm	80mm	70mm
CHDX6-324	CHDX6-324C	130mm	80mm	85mm
CHDX6-325	CHDX6-325C	180mm	80mm	70mm
CHDX6-326	CHDX6-326C	180mm	80mm	85mm
CHDX6-327	CHDX6-327C	250mm	80mm	70mm
CHDX6-328	CHDX6-328C	250mm	80mm	85mm
CHDX6-329	CHDX6-329C	175mm	127mm	75mm
CHDX6-330	CHDX6-330C	175mm	127mm	100mm

KEY FEATURES

High quality ABS | IP67 rated enclosure | IK07/08 impact tested

CUSTOMISE ME · PRINTING

CUSTOMISE ME · DRILLING

+44 (0)1638 716101 | sales@camdenboss.com | www.camdenboss.com

We operate a constant improvement policy, our products are subject to change without notice.

Vers 4

bsi ISO 9001 Quality Management Systems CERTIFIED FM 28614

268 HANDHELD CASES
292 UNIVERSAL ENCLOSURES
318 HEAVY DUTY AND ELECTRICAL ENCLOSURES
342 DESKTOP AND INSTRUMENT CASES
348 DEVELOPMENT BOARD ENCLOSURES
367 VERSATILE IOT AND SENSOR ENCLOSURES
370 CUSTOM SIZED ENCLOSURES

ACCESSORIES

Vents to fit X6, X7 and X8 enclosures

- Vents in two sizes for heat extraction
- The vent includes a gasket for water resistant applications
- Designed to meet the requirements of IP34





PART NO.	CUTOUT DIAMETER	MATERIAL
CHDA201V	63	Polycarbonate
CHDA202V	88	Polycarbonate
CHDA301V	63	ABS
CHDA302V	88	ABS

Mounting brackets to fit X6, X7 and X8 enclosures

- Brackets to mount each enclosure to any surface/wall
- See cross reference page 328 to select the correct size for your enclosure





PART NO.	SIZE	
CHDAPB014/4	1	Size 1 Bracket, 4x12 S/T Screw, 4pc kit
CHDAPB015/4	1	Size 1 Bracket, 5x12 S/T Screw, 4pc kit
CHDAPB025/4	2	Size 2 Bracket, M5x12 Screw, 4pc kit
CHDAPB025/6	2	Size 2 Bracket, M5x12 Screw, 6pc kit
CHDAPB026/6	2	Size 2 Bracket, M6x12 Screw, 6pc kit

Mounting plates to fit X6, X7 and X8 enclosures

- Material: Steel
- Mounting plates for each enclosure available
- See cross reference page 329 to select the correct size for your enclosure







PART NO.	LENGTH	WIDTH
CHDASMP21	65mm	95mm
CHDASMP22	65mm	115mm
CHDASMP23	65mm	165mm
CHDASMP24	65mm	235mm
CHDASMP25	101mm	161mm
CHDASMP26	159mm	159mm
CHDASMP27	159mm	248mm
CHDASMP28	248mm	348mm
CHDASMP29	295mm	395mm
CHDASMP30	85mm	232mm
CHDASMP32	129mm	179mm
CHDASMP33	129mm	224mm
CHDASMP34	170mm	266mm
CHDASMP35	179mm	179mm
CHDASMP36	216mm	316mm
CHDASMP37	262mm	262mm
CHDASMP38	265mm	365mm
CHDASMP39	358mm	458mm
CHDASMP40	450mm	555mm
CHDASMP41	550mm	755mm
CHDASMP42	248mm	248mm
CHDASMP43	248mm	308mm
CHDASMP44	232mm	535mm
CHDASMP45	345mm	535mm
CHDASMP46	159mm	348mm
CHDASMP49	65mm	65mm

268 HANDHELD CASES
292 UNIVERSAL ENCLOSURES
318 HEAVY DUTY AND ELECTRICAL ENCLOSURES
342 DESKTOP AND INSTRUMENT CASES
348 DEVELOPMENT BOARD ENCLOSURES
367 VERSATILE IOT AND SENSOR ENCLOSURES
370 CUSTOM SIZED ENCLOSURES

ACCESSORIES

Dual door to fit the X8 enclosure

- Dual door avaliable for some sizes
- Easy to assemble, sturdy construction
- See cross reference page 328 to select the correct size for your enclosure



PART NO.	KIT INCLUDES
CHDX807DD	4 legs, 1 door, 1 door handle, 1 frame, 8 screws
CHDX808DD	4 legs, 1 door, 1 door handle, 1 frame, 8 screws
CHDX810DD	4 legs, 1 door, 1 door handle, 1 frame, 8 screws
CHDX811DD	4 legs, 1 door, 1 door handle, 1 frame, 8 screws
CHDX812DD	4 legs, 1 door, 1 door handle, 1 frame, 8 screws
CHDX813DD	4 legs, 1 door, 1 door handle, 1 frame, 8 screws
CHDX814DD	4 legs, 1 door, 1 door handle, 1 frame, 8 screws

Lock to fit the X8 enclosure

- One or two locks can be fitted, depending on security level required
- See cross reference page 328 to select the correct size for your enclosure
- Moulded in high quality polycarbonate



PART NO.	SIZE
CHDA01IL	1
CHDA02IL	2
CHDA03IL	3
CHDA04IL	4

+44 (0)1638 716101 | sales@camdenboss.com | www.camdenboss.com

We operate a constant improvement policy, our products are subject to change without notice.

Vers 1

bsi ISO 9001 Quality Management Systems CERTIFIED FM 28614

ACCESSORIES FOR X6, X7 AND X8 SERIES

ENCLOSURE PART NO.		W/MOUNT					LOCKS			DUAL DOOR							
POLY	ABS	CHDAPB014/4	CHDAPB015/4	CHDAPB025/4	CHDAPB025/6	CHDAPB026/6	CHDA01IL	CHDA02IL	CHDA03IL	CHDA04IL	CHDX807DD	CHDX808DD	CHDX8010DD	CHDX811DD	CHDX812DD	CHDX813DD	CHDX814DD
CHDX6-221	CHDX6-321		●														
CHDX6-222	CHDX6-322		●														
CHDX6-223	CHDX6-323		●														
CHDX6-224	CHDX6-324		●														
CHDX6-225	CHDX6-325		●														
CHDX6-226	CHDX6-326		●														
CHDX6-227	CHDX6-327		●														
CHDX6-228	CHDX6-328		●														
CHDX6-229	CHDX6-329		●														
CHDX6-230	CHDX6-330		●														
CHDX7-221	CHDX7-321			●													
CHDX7-222	CHDX7-322			●													
CHDX7-223	CHDX7-323			●													
CHDX7-224	CHDX7-324			●													
CHDX7-225	CHDX7-325			●													
CHDX7-226	CHDX7-326			●													
CHDX7-227	CHDX7-327			●													
CHDX7-228	CHDX7-328			●													
CHDX7-229	CHDX7-329			●													
CHDX7-230	CHDX7-330			●													
CHDX7-231	CHDX7-331			●													
CHDX7-232	CHDX7-332			●													
CHDX7-237	CHDX7-327																
CHDX8-221	CHDX8-321	●					●										
CHDX8-222	CHDX8-322	●					●										
CHDX8-223	CHDX8-333	●					●										
CHDX8-224	CHDX8-324	●					●										
CHDX8-225	CHDX8-325	●					●										
CHDX8-226	CHDX8-326	●					●										
CHDX8-227	CHDX8-327			●				●			●						
CHDX8-228	CHDX8-328			●				●				●					
CHDX8-229	CHDX8-329			●			●										
CHDX8-230	CHDX8-330			●				●					●				
CHDX8-231	CHDX8-331			●				●						●			
CHDX8-232	CHDX8-332			●				●							●		
CHDX8-233	CHDX8-333			●					●							●	
CHDX8-234	CHDX8-334				●					●							●
CHDX8-235	CHDX8-335					●				●							
CHDX8-236	CHDX8-336					●				●							

*Add 'c' suffix for clear lid versions

268 HANDHELD CASES
292 UNIVERSAL ENCLOSURES
318 HEAVY DUTY AND ELECTRICAL ENCLOSURES
342 DESKTOP AND INSTRUMENT CASES
348 DEVELOPMENT BOARD ENCLOSURES
367 VERSATILE IOT AND SENSOR ENCLOSURES
370 CUSTOM SIZED ENCLOSURES

bsi ISO 9001 Quality Management Systems CERTIFIED
FM 28614

+44 (0)1638 716101 | sales@camdenboss.com | www.camdenboss.com

We operate a constant improvement policy, our products are subject to change without notice.

268 HANDHELD CASES
292 UNIVERSAL ENCLOSURES
318 HEAVY DUTY AND ELECTRICAL ENCLOSURES
342 DESKTOP AND INSTRUMENT CASES
348 DEVELOPMENT BOARD ENCLOSURES
367 VERSATILE IOT AND SENSOR ENCLOSURES
370 CUSTOM SIZED ENCLOSURES

ENCLOSURE PART NO.		MOUNTING PLATES																					
POLY	ABS	CHDASMP25	CHDASMP26	CHDASMP27	CHDASMP28	CHDASMP29	CHDASMP30	CHDASMP31	CHDASMP32	CHDASMP33	CHDASMP34	CHDASMP35	CHDASMP36	CHDASMP37	CHDASMP38	CHDASMP39	CHDASMP40	CHDASMP41	CHDASMP42	CHDASMP43	CHDASMP44	CHDASMP45	CHDASMP46
CHDX6-229	CHDX6-329	●																					
CHDX6-230	CHDX6-330	●																					
CHDX7-221	CHDX7-321		●																				
CHDX7-222	CHDX7-322																						●
CHDX7-223	CHDX7-323																						●
CHDX7-224	CHDX7-324				●																		
CHDX7-225	CHDX7-325					●																	
CHDX7-226	CHDX7-326			●																			
CHDX7-227	CHDX7-327			●																			
CHDX7-228	CHDX7-328																		●				
CHDX7-229	CHDX7-329																			●			
CHDX7-230	CHDX7-330				●																		
CHDX7-231	CHDX7-331																				●		
CHDX7-232	CHDX7-332																					●	
CHDX8-221	CHDX8-321						●																
CHDX8-222	CHDX8-322						●																
CHDX8-223	CHDX8-323							●															
CHDX8-224	CHDX8-324							●															
CHDX8-225	CHDX8-325								●														
CHDX8-226	CHDX8-326									●													
CHDX8-227	CHDX8-327										●												
CHDX8-228	CHDX8-328										●												
CHDX8-229	CHDX8-329											●											
CHDX8-230	CHDX8-330												●										
CHDX8-231	CHDX8-331													●									
CHDX8-232	CHDX8-332														●								
CHDX8-233	CHDX8-333															●							
CHDX8-234	CHDX8-334																●						
CHDX8-235	CHDX8-335																	●					
CHDX8-236	CHDX8-336																	●					

**Add 'c' suffix for clear lid versions*

+44 (0)1638 716101 | sales@camdenboss.com | www.camdenboss.com

We operate a constant improvement policy, our products are subject to change without notice.

Vers 2

bsi ISO 9001 Quality Management Systems CERTIFIED FM 28614