182.72.104.66UCFLGehäuseeinheiten

Housing units UCFL205 (Series UCFL)

two-bolt flanged housing units, cast iron, grub screws in inner ring, RSR seals

The datasheet is only an overview of dimensions and basic load ratings of the selected product. Please always observe all the guidelines in these overview pages. Further information is given on many products under the menu item "Description". You can also order comprehensive information via the Catalogue selection system (https://www.schaeffler.de/content.schaeffler.de/en/news_media/index.jsp) or by telephone on +49 (91 32) 82 - 28 97.

d	25	mm	
H	130	mm	
U	35,8	mm	
A	27	mm	
A_1	15	mm	
A_2	16	mm	
B	34,1	mm	
J	99	mm	
L	68	mm	
N	16	mm	
m	0,64	kg	Mass
	FL205		Designation, housing
	UC205		Designation, radial insert ball bearing

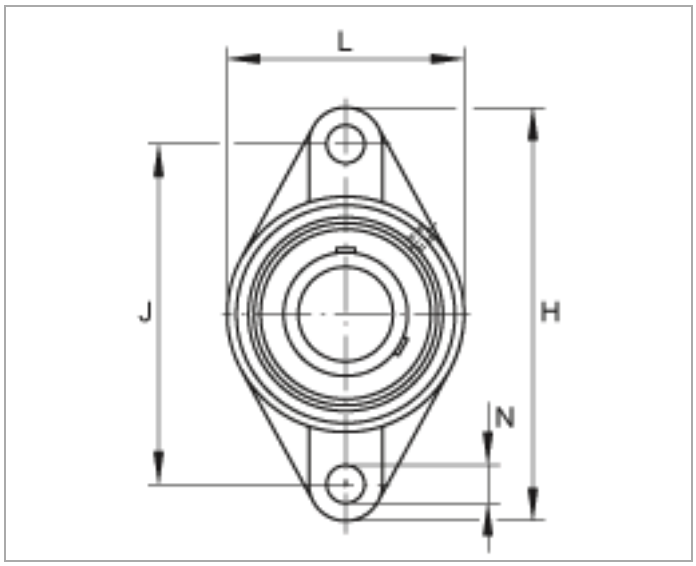
L
J
H
N

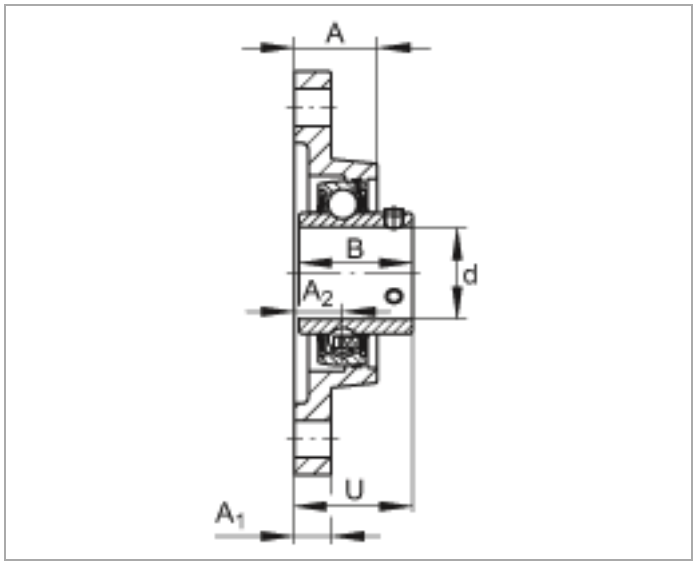
A
B
d
A2
U
A1