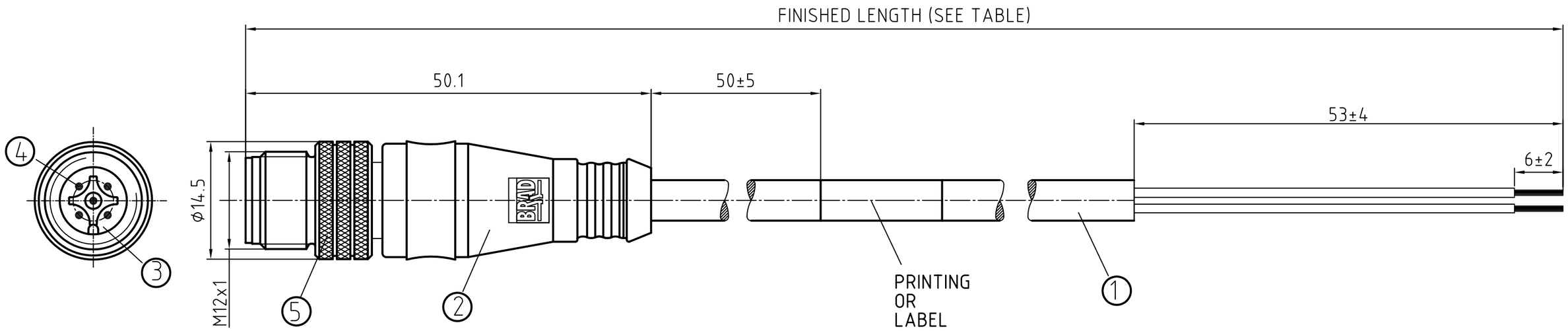

CONNECTOR SPECIFICATION:

VOLTAGE RATING	250 VAC/VDC
AMPERAGE RATING	max. 4 AMPS
PROTECTION	IP67
OPERATING TEMPERATURE	-30°C TO 80°C
UL CERTIFICATIONS	UL STYLE 2464
CSA CERTIFICATIONS	I/II A/B 80°/300V

ITEM	COMPONENT	MATERIAL	FINISH
5	COUPLER	BRASS	NICKEL PLATED
4	PIN CONTACT	COPPER ALLOY	GOLD OVER NICKEL
3	INSERT	NYLON	BLACK
2	OVERMOLD	POLYURETHANE (PUR)	YELLOW
1	CABLE- 22/3-5 (COPPER STRANDING) 3/4/5 CONDUCT. 300V	JACKET: PVC	JACKET: BLACK

MALE FACE VIEW

3-POLE	4-POLE	5-POLE
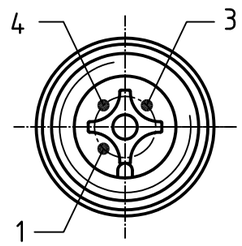	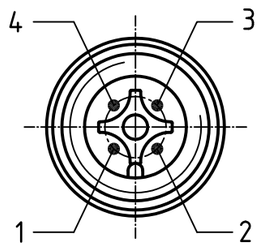	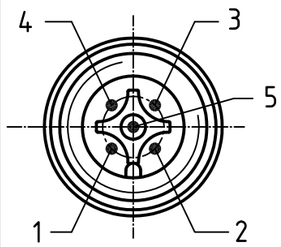
1 BROWN 3 BLUE 4 BLACK	1 BROWN 2 WHITE 3 BLUE 4 BLACK	1 BROWN 2 WHITE 3 BLUE 4 BLACK 5 GREY

WIRING DIAGRAM

DESCRIPTION: EC NO: WEU2010-0283
DRWN: LSTEMMLE 2010/01/20
CH'KD: NS ----
APPR: NSTAUDIG 2010/01/26
DESCRIPTION
REV 1

QUALITY SYMBOLS
▼ = 0
Ⓒ = 0

GENERAL TOLERANCES (UNLESS SPECIFIED)

	mm	INCH
4 PLACES	±---	±---
3 PLACES	±---	±---
2 PLACES	±---	±.01
1 PLACE	±0.3	±---
ANGULAR ±	--- °	

DRAFT WHERE APPLICABLE MUST REMAIN WITHIN DIMENSIONS

DIMENSION STYLE: MM
SCALE: 2:1
DESIGN UNITS: METRIC
THIRD ANGLE PROJECTION

DRAWN BY: ---- DATE: ----
CHECKED BY: RE DATE: 2010/01/21
APPROVED BY: NSTAUDIG DATE: 2010/01/25
MATERIAL NO.: SEE TABLE SHEET 2

MICRO-CHANGE CORDSET
3/4/5-POL MALS STR SE
22/3-5 PVC BLACK CABLE

molex MOLEX INCORPORATED

DOCUMENT NO.: SD-120065-040
SHEET NO.: 1 OF 1
SIZE: A3

THIS DRAWING CONTAINS INFORMATION THAT IS PROPRIETARY TO MOLEX INCORPORATED AND SHOULD NOT BE USED WITHOUT WRITTEN PERMISSION

POL	MATERIAL NUMBER	ENGINEERING NUMBER	FINISHED LENGTH
3	1200060240	803006E03M020	6.56' +3.5" -0 [2.0M +89 -0]

POL	MATERIAL NUMBER	ENGINEERING NUMBER	FINISHED LENGTH
4	1200060560	804006E03M020	6.56' +3.5" -0 [2.0M +89 -0]

POL	MATERIAL NUMBER	ENGINEERING NUMBER	FINISHED LENGTH
5	1200060667	805006E03M020	6.56' +3.5" -0 [2.0M +89 -0]

DESCRIPTION
EC NO: WEU2010-0283 2010/01/20
DRWN: LSTEMMLE ----
CH'KD: NS
APPR: NSTAUDIG 2010/01/26
DESCRIPTION
1
REV

QUALITY SYMBOLS
▼ = 0
Ⓒ = 0

GENERAL TOLERANCES (UNLESS SPECIFIED)

	mm	INCH
4 PLACES	±---	±---
3 PLACES	±---	±---
2 PLACES	±---	±.01
1 PLACE	±0.3	±---
ANGULAR ± --- °		

DRAFT WHERE APPLICABLE MUST REMAIN WITHIN DIMENSIONS

DIMENSION STYLE: MM
SCALE: 2:1
DESIGN UNITS: METRIC
THIRD ANGLE PROJECTION

DRAWN BY: ---- DATE: ----
CHECKED BY: RE DATE: 2010/01/21
APPROVED BY: NSTAUDIG DATE: 2010/01/25

MICRO-CHANGE CORDSET
3/4/5-POL MALS STR SE
22/3-5 PVC BLACK CABLE

molex MOLEX INCORPORATED

MATERIAL NO.: SEE TABLE
DOCUMENT NO.: SD-120065-040
SHEET NO.: 1 OF 1
SIZE: A3

THIS DRAWING CONTAINS INFORMATION THAT IS PROPRIETARY TO MOLEX INCORPORATED AND SHOULD NOT BE USED WITHOUT WRITTEN PERMISSION