

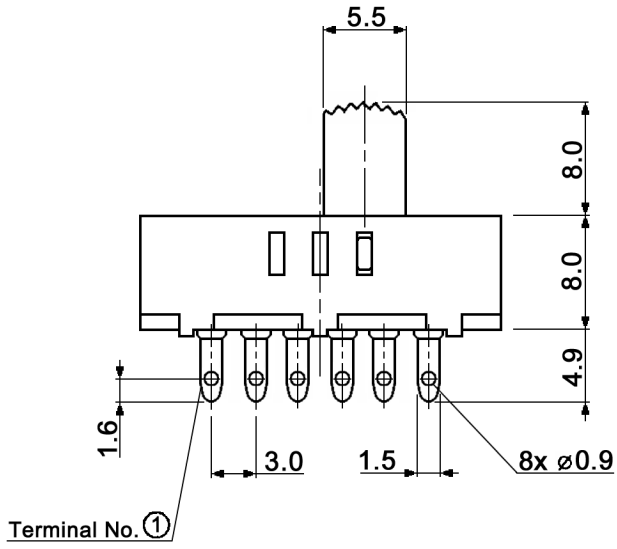

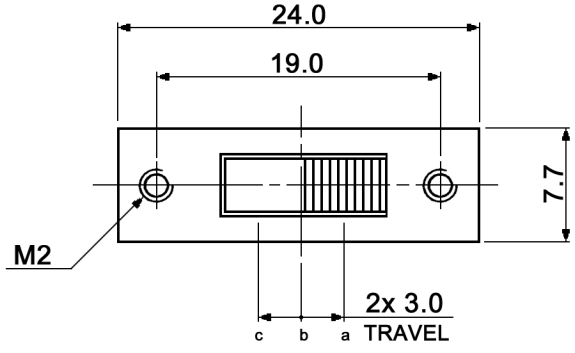

CIRCUIT DIAGRAM
C: COMMON PIN
BOTTOM VIEW

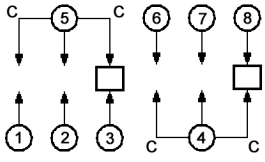

shorting

HOLE LAYOUT ⊕ 0.05

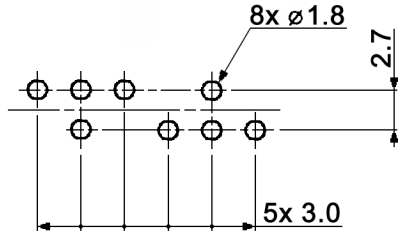

Compliance: RohS II (2011/65/EU)

Tolerances: up to 10: ±0.2mm above 10-50: ±0.3mm			Date	Name	MFS 231 P	
			08/14	dr		
			knitter-switch		30 31 66	Page 1/2
Modifications	Date	Name				

Specifications:

Contact rating:	0.3A, 30V DC
Contact resistance:	30mOhm max.
Insulation resistance:	100MOhm min. at 500V DC for 1 minute
Dielectric strength:	500V AC (50/60Hz, 2mA) for 1 minute
Operating temperature:	-10°C to +60°C
Mechanical life:	10 000 cycles
Operating force:	a-b c-b: 250 +/-100gf
	b-a b-c: 400 +/-200gf
Material:	Terminal / contact plate: brass strip, silver plated
	Base: phenolic resin, natural
	Frame: SPCC, nickel plated
	Spring: SWC, temper
	Steel ball: carbon steel, natural
	Slider: PA66, black
Soldering conditions:	wave soldering

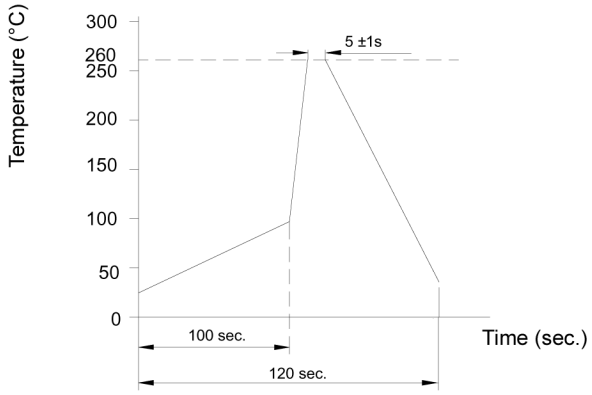

Compliance: RohS II (2011/65/EU)

Tolerances: up to 10: ±0.2mm above 10-50: ±0.3mm			Date	Name	MFS 231 P
			08/14	dr	
			knitter-switch	30 31 66	Page 2/2
Modifications	Date	Name			