Modulostar® CMC10

FUSE HOLDERS, FUSE BASES AND SUPPORTS

IEC CYLINDRICAL FUSE HOLDERS



The innovative and comprehensive Modulostar® range of Mersen fuse-holders. Modular fuse-holders are finger-safe under IEC standards to an IP20 grade of protection, including fuse changing (with the flick of a finger). Modular fuse-holders are available in 1, 2, 3 or 4 poles, with or without visual blown fuse indicator. Multi-pole units can also be field assembled by ordering pin-ties assembly kit. Modulostar® range is made of tough and durable thermoplastic or thermoset material.

TECHNICAL DATA OVERVIEW

Voltage AC	690 VAC
Voltage DC	690 VDC
Amper (A)	32 A
SCCR	200kA
Mounting	Installation on to DIN rails to EN 60715
Product Size	For cylindrical fuse links 10x38 aM, gG and 10x38 Mersen Protistor®
Number of poles	1 to 4 poles

FEATURES & BENEFITS

- Modular design
- Compact design for space saving
- DIN rail mounting
- Degree of protection: IP20
- Finger safe
- Easy access to the fuse
- Lockable without accessory
- Sealable in closed & open position
- Optional visual blown fuse indicator
- Multi-pole assembly kit available
- Plastic material UL94V2 mini
- Plastic material R22HL2 for railway application
- Flame retardant materials with glow wire flammability index to 960°C
- Schock and vibration tested for marine and railway applications

APPLICATIONS

- All circuits up to 690V for protection of motors, transformers, low voltage distribution, control circuits, drive protection, metering
- Non-load operation

STANDARDS

- IEC 60269-2 and IEC 60947-3 Compliance
- RoHS, Reach compliant
- Marine certificates

©2024 Mersen. All rights reserved. Mersen reserves the right to change, adapt, limit or discontinue its products. Therefore the data provided herein are for information only and are not contractually binding. To ensure that Mersen provides the best solution to your needs, please contact and provide Mersen with all relevant technical specifications and conditions.

PRODUCT RANGE



CMC102



CMC103N

Modulostar® compact fuse-holders for 10.3x38.1 fuse-links, without indicator

Catalog number	Item number	Number of poles/phases	Design	Package	Weight
CMC101	P1062705	1	CMC10 single pole	12	45 g
CMC101N	G1062698	1 + N	CMC10 single pole + neutral conductor	6	95 g
CMC102	H1062699	2	CMC10 double pole	6	92 g
CMC103	E1062696	3	CMC10 triple pole	4	0.14 kg
CMC103N	Y1062690	3 + N	CMC10 triple pole + neutral conductor	3	0.19 kg
CMC104	Z1062691	4	CMC10 quadruple pole	3	0.19 kg
CMC810N	W1062688	N	CMC8 CMC10 neutral conductor	12	48 g



CMC101I



CMC103I

Modulostar® compact fuse-holders for 10.3x38.1 fuse-links, with standard indicator

Catalog number	Item number	Number of poles/phases	Design	Voltage limit for blown fuse indicator	Package	Weight
CMC101I	S1062708	1	CMC10 single pole	-	12	46 g
CMC101NI	J1062700	1 + N	CMC10 single pole + neutral conductor	-	6	95 g
CMC102I	L1062702	2	CMC10 double pole	-	6	93 g
CMC103I	F1062697	3	CMC10 triple pole	-	4	0.14 kg
CMC103NI	A1062692	3 + N	CMC10 triple pole + neutral conductor	-	3	0.19 kg
CMC104I	B1062693	4	CMC10 quadruple pole	-	3	0.19 kg
-	on demand	-	Version with special indicator	Standard: 50V-700V AC/DC Very low: 20V-50V AC/DC	-	-



CMC101N1M

Modulostar® compact fuse-holders for 10.3x38.1 fuse-links 1M=1phase + neutral

Catalog number	Item number	Number of poles/phases	Design	Package	Weight
CMC101N1M	R1207676	1	CMC10 1p+N, 1 module	12	55.3 g



CMC103N3M

Modulostar® compact fuse-holders for 10.3x38.3 fuse-links 3M=3phases + neutral

Catalog number	Item number	Number of poles/phases	Design	Package	Weight
CMC103N3M	K1211511	3 + N	CMC10 3p+N, 3 modules	4	0.17 kg

©2024 Mersen. All rights reserved. Mersen reserves the right to change, adapt, limit or discontinue its products. Therefore the data provided herein are for information only and are not contractually binding. To ensure that Mersen provides the best solution to your needs, please contact and provide Mersen with all relevant technical specifications and conditions.

TECHNICAL DATA

	CMC10	CMC10I	CMC101N1M	CMC103N3M
Size	10x38	10x38	10x38	10x38
Number of poles/phases	1, 1+N, 2, 3, 3+N, 4	1, 1+N, 2, 3, 3+N, 4	1 pole : 1 phase + neutral	3 poles : 3 phases + neutral
Conventional free air thermal current with fuse links I_{th}	32 A	32 A	32 A	32 A
Max. power dissipation of fuse links P_n	3W	3W	3W	3W
Max. power dissipation	4 W	4 W	4 W	12 W
Power dissipation of fuse-holder	0.4 W	0.4 W	0.4 W	0.6 W
Utilisation category	AC20B/DC20B	AC20B/DC20B	AC20B/DC20B	AC20B/DC20B
Rated insulation voltage U_i	1000 V	1000 V	1000 V	1000 V
SCCR	200 kA	200 kA	120 kA	120 kA
Rated impulse withstand voltage U_{imp}	6 kV	6 kV	6 kV	6 kV
Degree of protection	IP 20	IP 20	IP 20	IP 20
Voltage limit for blown fuse indicator	-	50V to 700VAC/DC	NA	NA
Indication System	-	with indicator	-	-
Operating temperature	-40°C to 70°C with carrier operation -50°C to 90°C without carrier operation			
Storage temperature	-40°C to 70°C	-40°C to 70°C	-40°C to 70°C	-40°C to 70°C
Connection	Max. tightening torque: 2Nm (17.7lbs.-in) Rigid / Stranded wire = 1-16mm² (16-6AWG) Max. 2x6mm² PZ2 or flat 5.5x1mm screw drivers recommended (max. diameter 6mm)		Max. tightening torque: 2Nm Wire = 1-10mm² solid / 1-6 mm² stranded Max. 2x6mm² PZ2 or flat 5.5x1mm screw drivers recommended (max. diameter 6mm)	
Vibration	Withstand on the 3 main axis*: Sinusoidal vibration testing according to IEC 60068-2-6 2 to 13Hz x= 1 mm peak 13 to 100Hz y= 0.7g peak according to french marine application Random vibration testing according to IEC 61373 Category 1 Class B		-	-
Shock	Shock testing according to IEC 61373 Category 1 Class B Shock testing according to IEC 60068-2-27 15g/11ms/18 shocks * for specific usage please contact us		-	-

SPECIFIC USAGE CONDITIONS

Ambient temperature	-40° to 20°C	30°C	40°C	50°C	60°C	70°C	80°C	90°C
Derating factor (I_e)	1	1	1	0.92	0.83	0.73	0.62	0.48
Humidity	95%	90%	80%	50%	-	-	-	-
Dampness derating	1	0.95	0.90	-	-	-	-	-

No of poles (side by side)	1 to 3	>/= 4
Derating factor of current (I_{th})	1	0.9

©2024 Mersen. All rights reserved. Mersen reserves the right to change, adapt, limit or discontinue its products. Therefore the data provided herein are for information only and are not contractually binding. To ensure that Mersen provides the best solution to your needs, please contact and provide Mersen with all relevant technical specifications and conditions.

DIMENSIONS

Modulostar® CMC10 fuse-holders for cylindrical fuse-links class 10x38mm

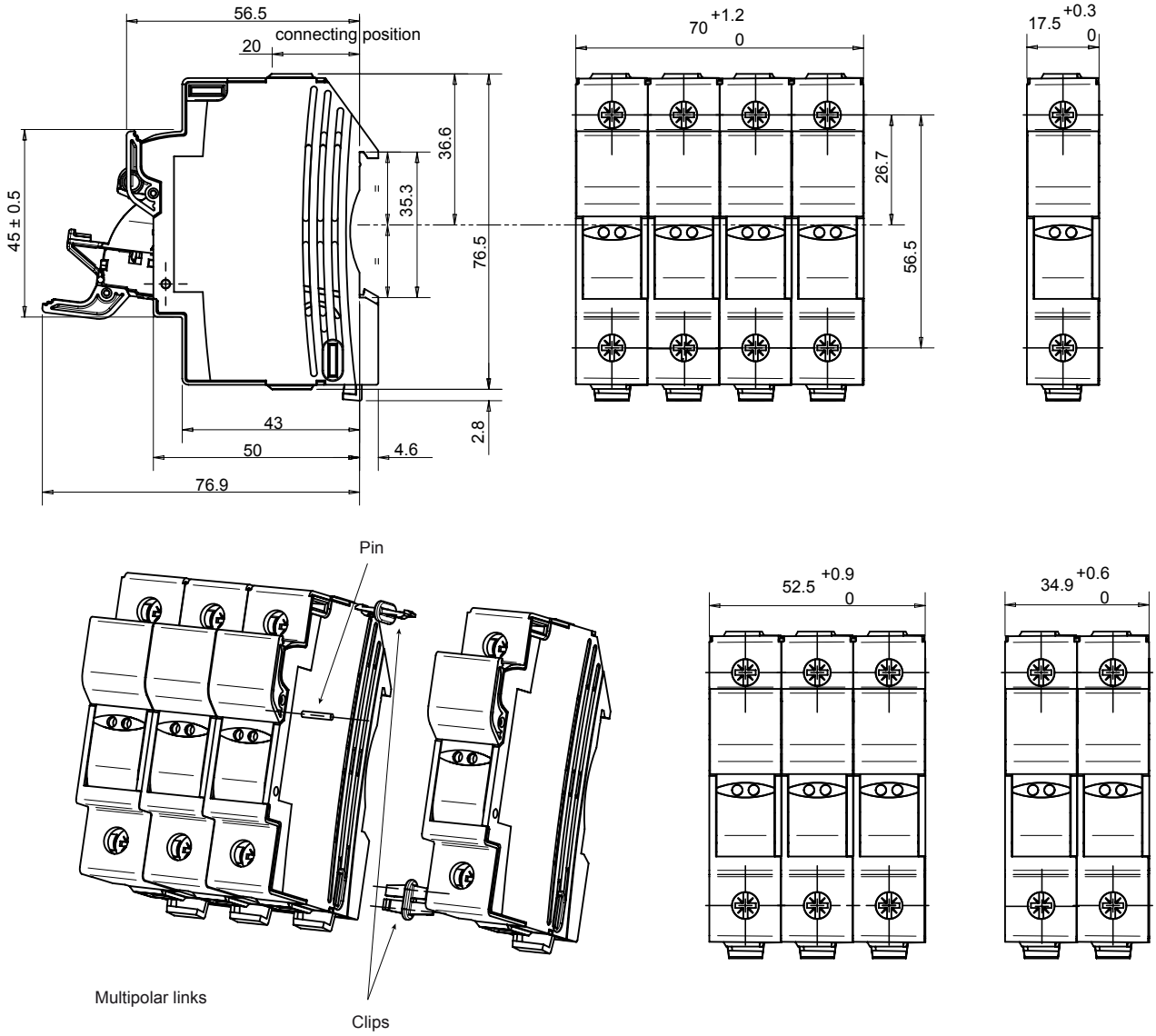

Dimensions in mm

EP.MERSEN.COM

©2024 Mersen. All rights reserved. Mersen reserves the right to change, adapt, limit or discontinue its products. Therefore the data provided herein are for information only and are not contractually binding. To ensure that Mersen provides the best solution to your needs, please contact and provide Mersen with all relevant technical specifications and conditions.

MERSEN Expertise, our source of energy

DIMENSIONS

Modulostar® compact fuse-holders for 10.3x38.1 fuse-links 1M=1phase + neutral

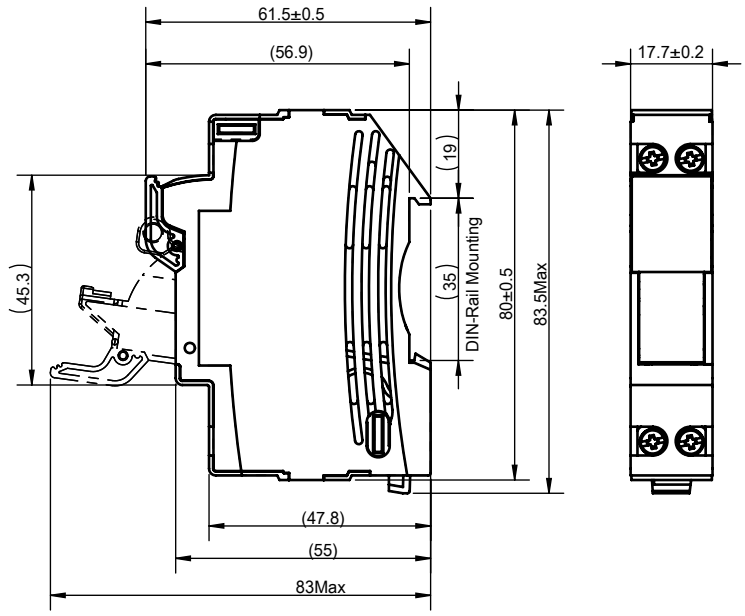

Dimensions in mm

Modulostar® compact fuse-holders for 10.3x38.3 fuse-links 3M=3phases + neutral

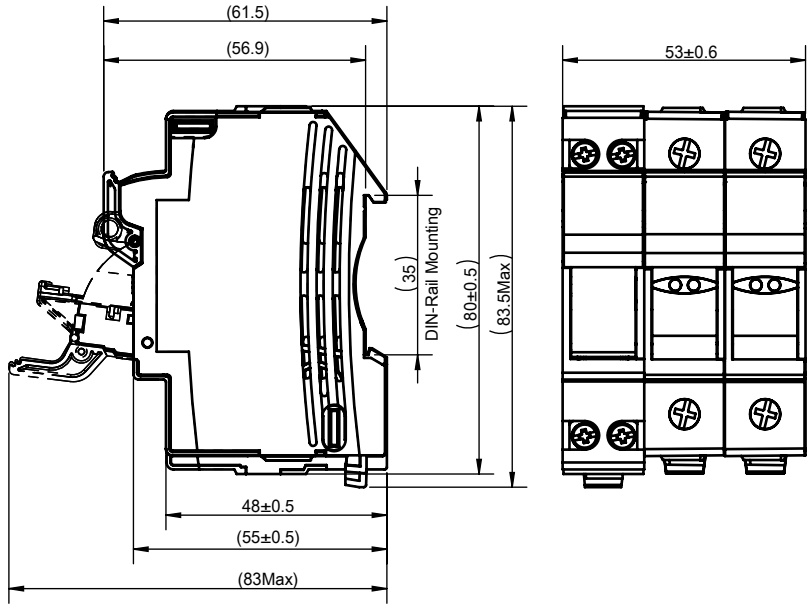

Dimensions in mm

©2024 Mersen. All rights reserved. Mersen reserves the right to change, adapt, limit or discontinue its products. Therefore the data provided herein are for information only and are not contractually binding. To ensure that Mersen provides the best solution to your needs, please contact and provide Mersen with all relevant technical specifications and conditions.

ACCESSORIES



CMS810PAK

Kit for multi phase connection

Catalog number	Item number	Features	Package	Weight
CMS810PAK	Z233725	Links for connection of multipole units	12	0.5 g



LOCK

Locking devices

Catalog number	Item number	Features	Package	Weight
LOCK	M223525	Padlock	1	0.48 kg



TBB1CL



TBB23A

Power supply

Catalog number	Item number	Application	Features	Package	Weight
TBB1CL	Y1068371	Max. rms current 90A	1 phase lateral incoming power supply	50	10 g
TBB23A	F210317	Max. rms current 90A	2 & 3 phases axial incoming power supply	50	23.3 g
TBB23C	G210318	Max. rms current 90A	2 & 3 phases lateral incoming power supply	50	23.1 g



TBB23C



CMS810BB1F13



CMS810BB2F6

Wiring bars / Insulated bus bars

Catalog number	Item number	Application	Features	Package	Weight
Wiring bars / Insulated Busbars					
CMS810BB1F13	T210306	Max. rms current 63A, for installation of 13 modules	single pole, 10 mm², partition 17,5 mm (distance of poles), peg design, L-shaped	10	33.5 g
CMS810BB2F6	V210307	Max. rms current 63A, for installation of 6 modules	double pole, 10 mm², partition 17,5 mm (distance of poles), peg design, L-shaped	10	80 g
CMS810BB3F4	W210308	Max. rms current 100A, for installation of 4 modules	triple pole, 10 mm² partition 17,5 mm (distance of poles), peg design, L-shaped	10	84 g
CMS810BB4F3	X210309	Max. rms current 100A, for installation of 3 modules	quadruple pole, 10 mm², partition 17,5 mm (distance of poles), peg design, L-shaped	10	0.12 kg

©2024 Mersen. All rights reserved. Mersen reserves the right to change, adapt, limit or discontinue its products. Therefore the data provided herein are for information only and are not contractually binding. To ensure that Mersen provides the best solution to your needs, please contact and provide Mersen with all relevant technical specifications and conditions.