GD025AT2

Switch disconnector, for photovoltaic applications, direct operating version, complete with black handle, 25A 800VDC - 16A 1000VDC



Product designation			Switch disconnector
Product type designation			GD
Number of poles		Nr.	2
Operating voltage type			DC
Contact characteristics			
IEC Conventional free air thermal current Ith		A	25
Rated insulation voltage Ui IEC/EN		V	1000
Rated impulse withstand voltage Uimp		kV	8
Operating current Ie			
DC21A			
	600V	A	25
	800V	A	25
	1000V	A	16
Power dissipation per pole max		W	0.8
Mechanical life		cycles	10000
Mechanical features			
Operating position			
	normal		Vertical plan
	allowable		Any
Fixing			Screw / DIN rail 35mm
Terminals			
	type		Screw with washer
	tool		Phillips 1
Tightening torque for terminals			
	min	Nm	1.2
	max	Nm	1.6
	min	lbin	1.3
	max	lbin	1.2
Conductor section			
	IEC min	mm²	1
	IEC max	mm²	10
	AWG/kcmil min		18
	AWG/kcmil max		8
UL technical data			
UL Standard			UL60947-4-1
Ambient conditions			
Operating temperature			
	min	°C	-25
	max	°C	+55
Storage temperature			
	min	°C	-40
	max	°C	+70
Max altitude		m	3000

The characteristics described in this document are subject to updates or modifications at any time. The descriptions, technical and functional information, illustrations and instructions in this brochure are purely illustrative, and are consequently not contractually binding

GD025AT2

Switch disconnector, for photovoltaic applications, direct operating version, complete with black handle, 25A 800VDC - 16A 1000VDC

Resistance & Protection

Frontal IP degree	IP20

Dimensions

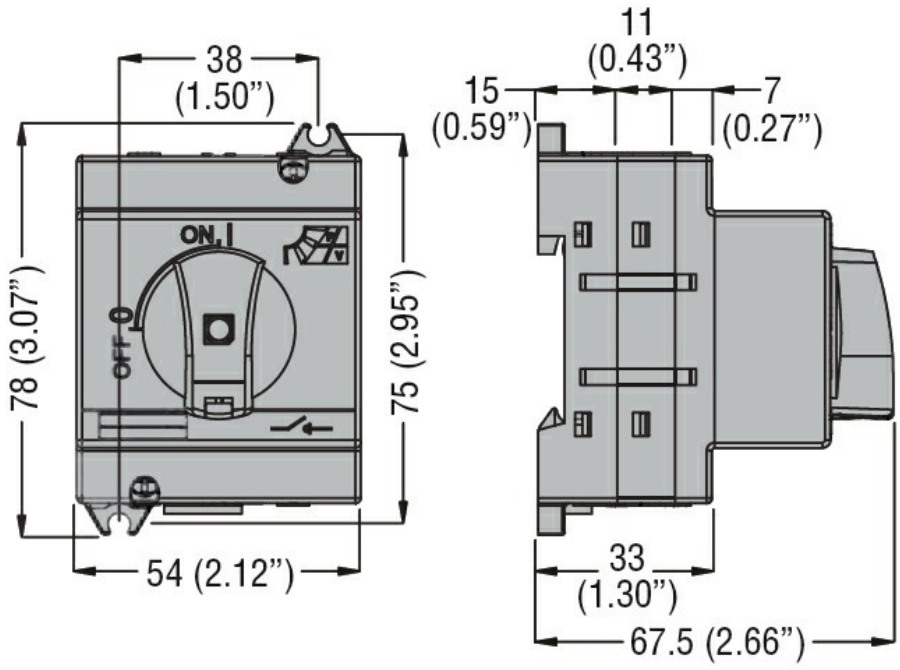

Wiring diagrams

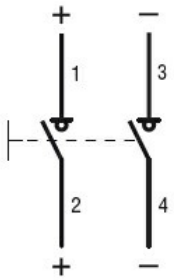

Certifications and compliance

Compliance	
	IEC/EN 60947-1
	IEC/EN 60947-3
Certifications	
	EAC

ETIM classification

ETIM 8.0	EC000216 - Switch disconnector

The characteristics described in this document are subject to updates or modifications at any time. The descriptions, technical and functional information, illustrations and instructions in this brochure are purely illustrative, and are consequently not contractually binding