E70170

Wirable socket

SDOGB030ZDSFKPG

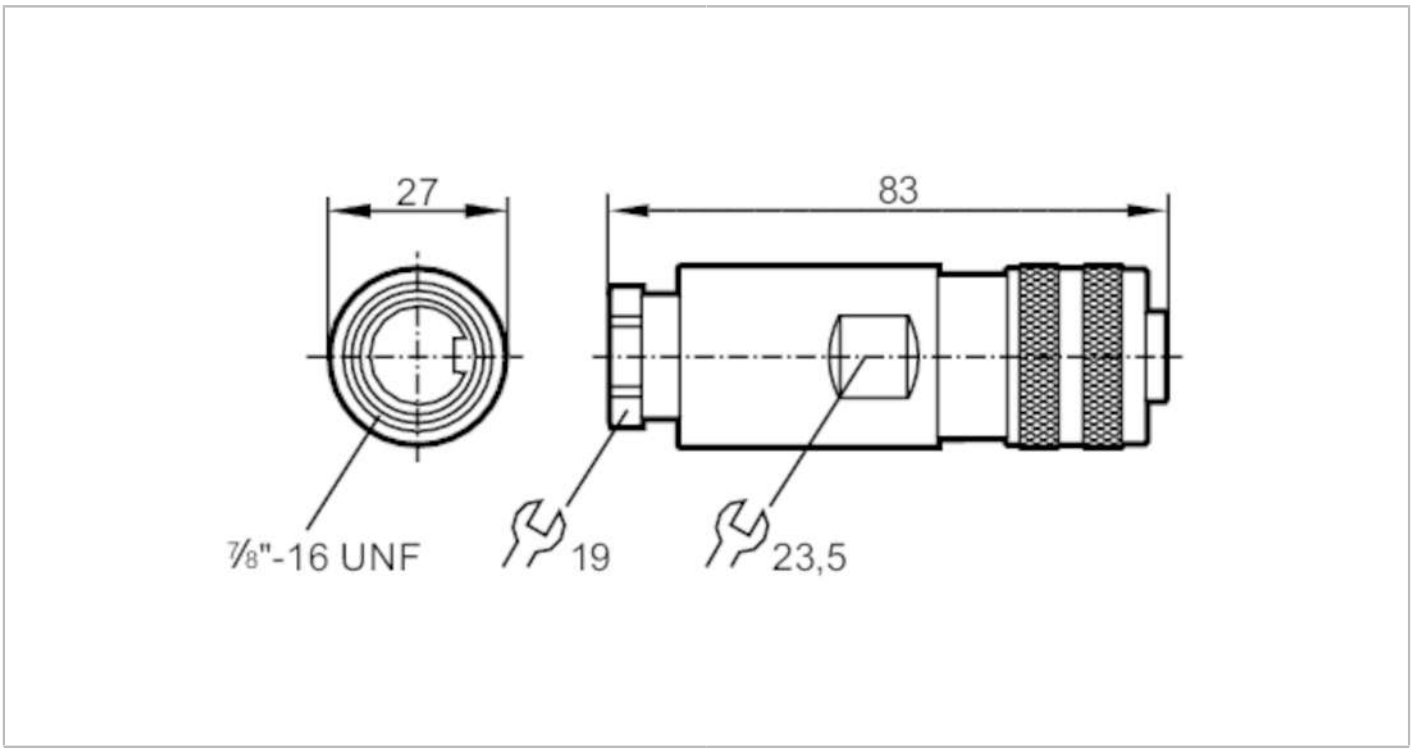

Electrical data		
Operating voltage	[V]	< 300 AC/DC
Max. current load total	[A]	12
Operating conditions		
Ambient temperature	[°C]	-25...85
Protection		IP 67
Mechanical data		
Weight	[g]	54.2
Dimensions	[mm]	27 x 27 x 83
Moulded-body material		PBT
Material nut		diecast zinc
Remarks		
Pack quantity		1 pcs.
Electrical connection		
terminals: ...1.5 mm²; Cable sheath: Ø 8...10 mm		
Electrical connection - socket		
Connector: 1 x 7/8", straight; Moulded body: PBT; Locking: diecast zinc		

E70170

Wirable socket

SDOGB030ZDSFKPG



Connection

