INSTALLATION INSTRUCTION

DC switch disconnectors

OTDC100...250_G_



Table of contents

03	**Use of symbols**
04	**Receiving, handling and storage**
05	**Read this safety instructions carefully before using this product**
06–08	**Circuits**
09	**Enclosure dimensioning**
10	**Mounting OTDC_G_**
11–12	**Busbars and compression lugs**
13	**Mechanical lug kits OZXA100, OZXA200, OZXA252**
14	**Direct handle kit OTDV200GK**
15	**Phase Barrier kit OTDCB200G/2**
16	**Connection bar kits**
17	**Terminal shroud kit OTDCS200GG1**
18	**Auxiliary contacts OA_**
19–25	**Dimension drawings**

Use of symbols



Hazardous voltage
Warns about a situation where a hazardous voltage may cause physical injury to a person or damage to equipment.



Caution
Provides important information or warns about a situation that may have a detrimental effect on equipment.



General warning
Warns about a situation where something other than electrical equipment may cause physical injury to a person or damage to equipment.



Information
Provides important information about the equipment.

Receiving, handling and storage



Warning

HAZARD OF EQUIPMENT OVERTURNING

When moving with a forklift, do not remove the shipping package until the device is in its final location.

Failure to follow this instruction will result in personal injury or equipment damage.

Receiving and handling
Upon receipt, carefully inspect the switch for damage that may have occurred during transit. If damage is evident, or there is visible indication of rough handling, immediately file a damage claim with the transportation company, and notify your local ABB sales office.

Do not remove the shipping package until ready to install the switch.

Storage
If the unit will not be placed into service immediately, store the switch on its original package in a clean, dry location. To prevent condensation, maintain a uniform temperature. Store the unit in a heated building, allowing adequate air circulation and protection from dirt and moisture. Storing the unit outdoors could cause harmful condensation inside the switch enclosure.

Read these safety instructions carefully before using this product!



Danger

HAZARD OF ELECTRIC SHOCK, EXPLOSION, OR ARC FLASH

- Apply appropriate personal protective equipment and follow safe electrical work practices.
- This equipment must only be installed and serviced by qualified electrical personnel.
- Before performing visual inspections, tests, or maintenance on the equipment, disconnect all sources of electric power. Assume that all circuits are live unless they are completely deenergized, tested, grounded, and tagged. Pay particular attention to the design of the power system. Consider all sources of power, including the possibility of backfeeding.
- Turn off switch before removing or making load side connections.
- Always use a properly rated voltage sensing device at all line and load to confirm switch is off.
- Turn off power supplying switch before doing any other work on or inside switch.

Failure to follow these instructions could result in death or serious injury.

Circuits

Circuit 1a

2-pole, 2-wire, 1-circuit

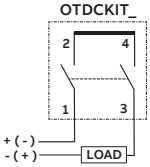

For grounded systems

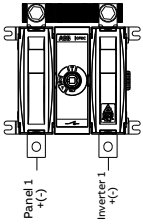

1)

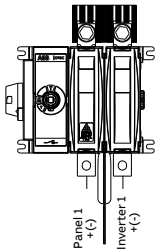

2)

Circuit 2a, 2b

2-pole, 4-wire, 1-circuit

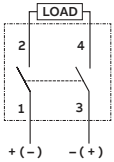

2-pole, 4-wire, 1-circuit

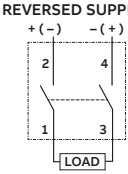

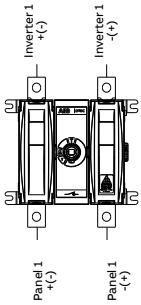

3)

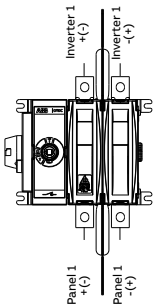

4)

Circuit 3

4-pole, 4-wire, 2-circuit

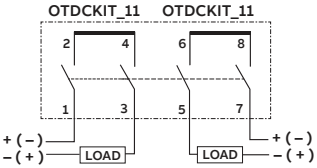

For grounded systems

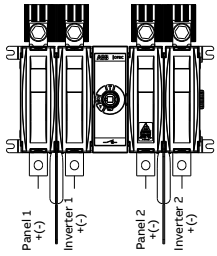

5)

Circuit 4a, 4c

4-pole, 4-wire, 2-circuit

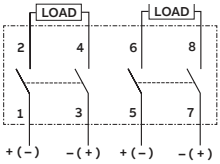

2-pole, 4-wire, 1-circuit

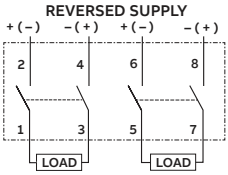

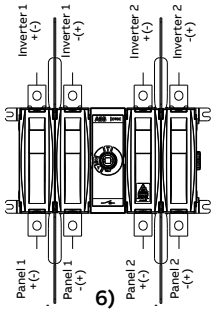

6)

Circuit G5a, G5b, G5e 3-pole, 1500V

3-pole, 4-wire, 1-circuit

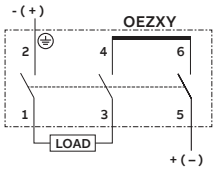

3-pole, 4-wire, 1-circuit

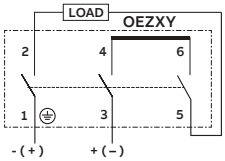

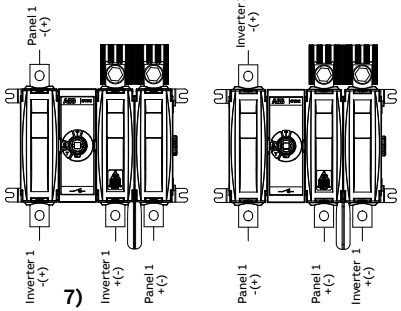

7)

3-pole, 4-wire, 1-circuit

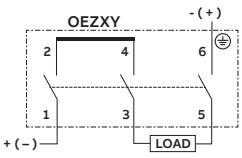

For grounded systems

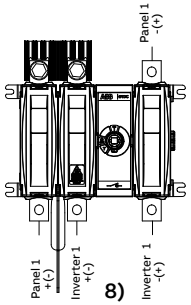

8)

Circuit 6m, 6n

4-pole, 4-wire, 2-circuit

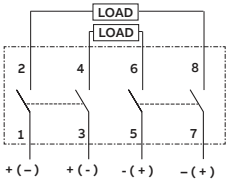

4-pole, 4-wire, 2-circuit

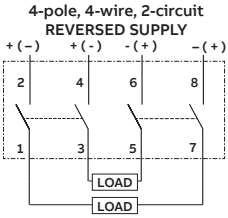

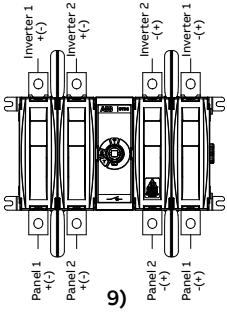

9)

	Types
1	OTDC100...250_G11,_GV11+OTDCKIT250GS101
2	OTDC100...250_G02S, _GV02S + OTDCKIT250GS11
3	OTDC100...250_G11,_GV11
4	OTDC100...250_G02S,_GV02S
5	OTDC100...250_G22,_GV22 + 2 x OTDCKIT250GS11
6	OTDC100...250_G22, _GV22
7	OTDC100...250_G12, _GV12 + OTDCKIT250GS11
8	OTDC100...250_G21, _GV21 + OTDCKIT250GS11
9	OTDC100...250_G22,_GV22

Enclosure dimensioning
Clearances per UL98 / IEC 60947

mm / in

Warning
A minimum distance of 25,4 mm (1 in) from current carried parts to any conductive part.

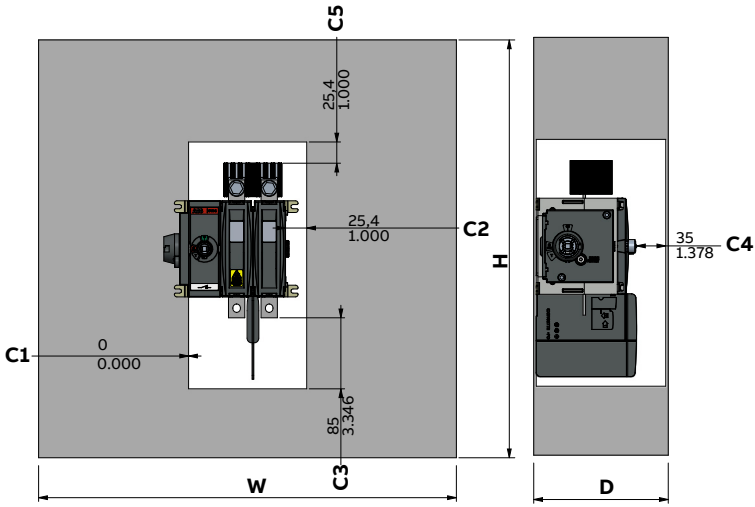

Minimum clearance to any conductive part (mm / inch)

From mechanism	From pole	From terminal blade	From mechanism shaft	From connection bar
C1	C2	C3	C4	C5
0	25,4 / 1	85 / 3.35	35 / 1.378	25,4 / 1.000

Minimum enclosure size or equivalent volume UL98 (mm / inch)

Switch size	No. of poles	H	W	D
OTDC100-250UG_	2	500 / 19	500 / 19	200 / 7.9
	4	500/ 19	500 / 19	200 / 7.9

Mounting
OTDC_G_

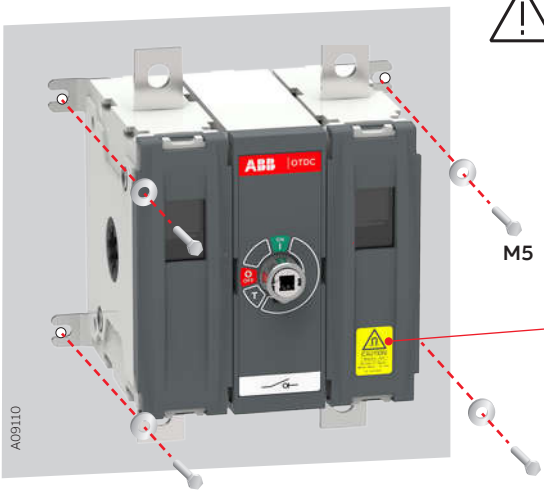

Warning
Magnetic field exceeds 5 Gauss within 15 cm / 6 in of surface. Can erase credit cards. Avoid medical Implant Device proximity.

Caution
Maximum shaft length 210 mm.
Minimum shaft insertion depth 30 mm.

For side operated version shaft to be inserted as far as it goes.

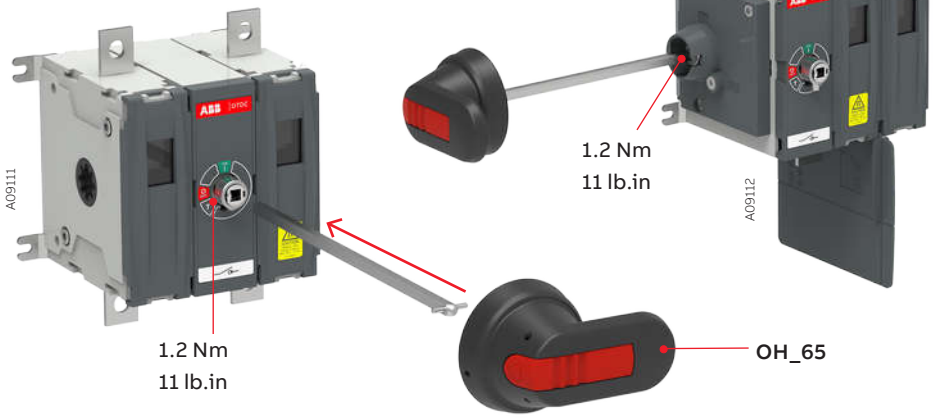

Busbars and compression lugs

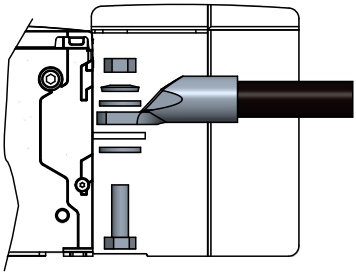

Compression Lug dimensions	One lug [mm / in] above terminal blade
A: Maximum height	23 / 0.91
B: Recommended maximum width	19 / 0.75
C: Maximum length	67 / 2.64
D: Recommended bolt slot	8,5 / 0.33

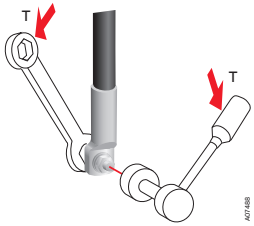

M8
15-22 Nm
133-195 lb.in

In press-nut versions support contact by holding conductor with your hand.

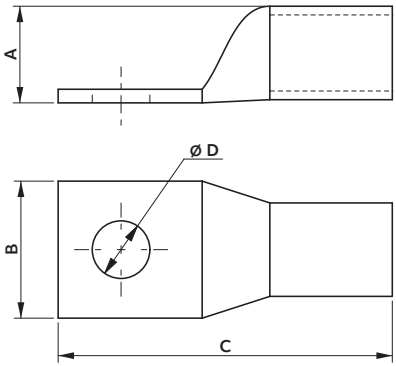

Caution
Always use counter torque when tightening terminals!

Caution
Phase barrier or shroud is mandatory on all switch types, except OTDC_G_11.
Type for package of 2 barriers is OTDCB200G/2.

Warning
A minimum distance of 25,4 mm (1 in) from current carried parts to any conductive part.

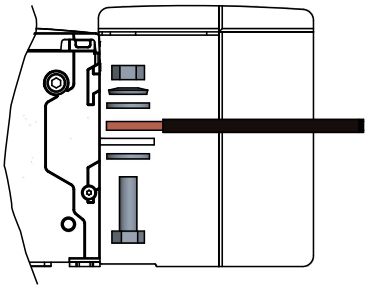

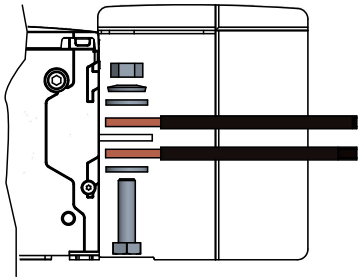

Busbar width	[mm / in]
Min-max	15-25 / 0.59-1
Recommendation	15 / 0.59

Min busbar or flexible cross sentions according UL98 / IEC60947

Current	Min cross section of copper
100 A	48 mm²
160 A	72 mm²
200 A	96 mm²
250 A	144 mm²

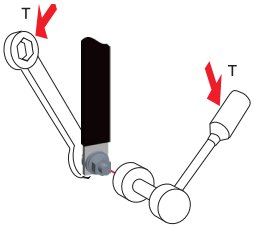

M8
15-22 Nm
133-195 lb.in

In press-nut versions support contact by holding conductor with your hand.

mm / in

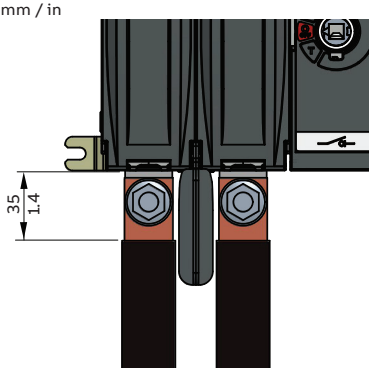

Caution
Always use counter torque when tightening terminals!

Caution
Phase barrier or shroud is mandatory on all switch types, except OTDC_G_11.
Type for package of 2 barriers is OTDCB200G/2.

Warning
Max 35 mm bare conductor from switch frame. See the picture.

Warning
A minimum distance of 25,4 mm (1 in) from current carried parts to any conductive part.

Mechanical lug kits
OZXA100, OZXA200, OZXA252

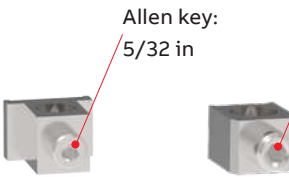

OZXA-100_ **OZXA-200_** **OZXA-252_**

Caution
Always use counter torque when tightening terminals!

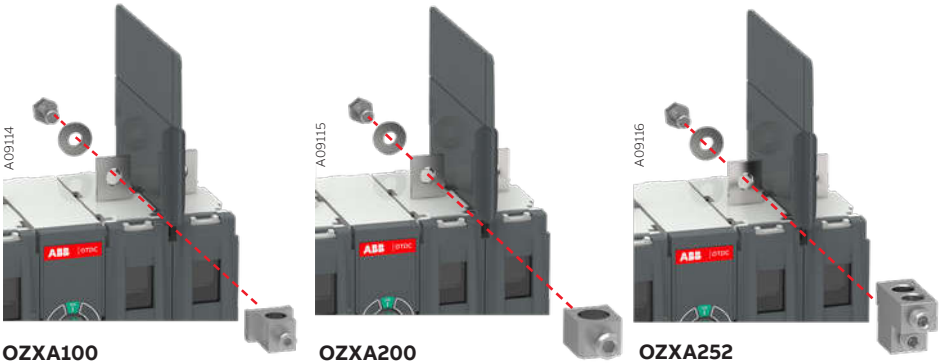

OZXA100 **OZXA200** **OZXA252**

Value	Torque
OZXA100 mounting	124 in.lb / 14 Nm
OZXA100 wire	14-10 AWG - 35 lb.in / 4 Nm 8 AWG - 40 lb.in / 4.5 Nm 6-4 AWG - 45 lb.in / 5.1 Nm 3-2/0 AWG - 50 lb.in / 5.6 Nm
OZXA200 mounting	72 in.lb / 8 Nm
OZXA200 wire	200 in.lb / 22,6 Nm
OZXA252 mounting	132 in.lb / 15 Nm
OZXA252 wire	120 in.lb / 13,6 Nm

Warning
A minimum distance of 25,4 mm (1 in) from current carried parts to any conductive part.

Caution
Phase barrier or shroud is mandatory on all switch types, except OTDC_G_11. Type for package of 2 barriers is OTDCB200G/2.

Direct handle kit
OTDV200GK

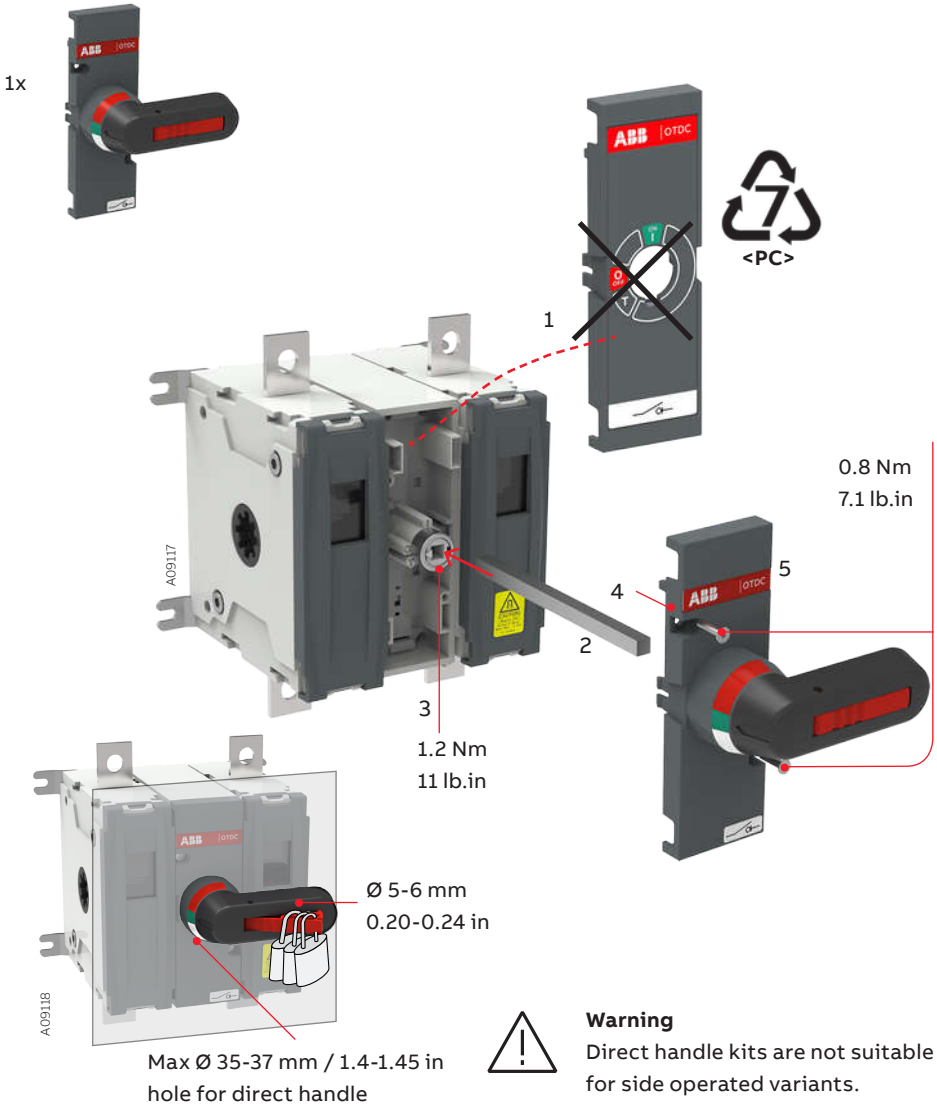

Warning
Direct handle kits are not suitable for side operated variants.

Phase Barrier kit
OTDCB200G/2

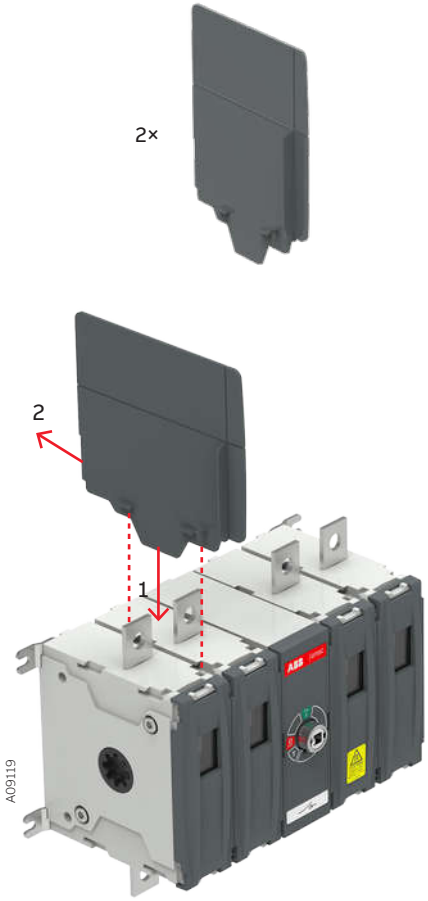



Caution
Phase barrier or shroud is mandatory on all switch types, except OTDC_G_11.
Type for package of 2 barriers is OTDCB200G/2.

Caution
Installation only as shown in drawings.

Connection bar kits
Aluminium bars

Aluminium connection bar kits can be used with IEC and UL types.

M8 bolt **8-10 Nm, 72-88 lb.in**

Caution
Installation only as shown in drawings.

OTDCKIT250GS101
For use with OTDC100...250_G_11

Connection bar must be on the same level with terminal end.

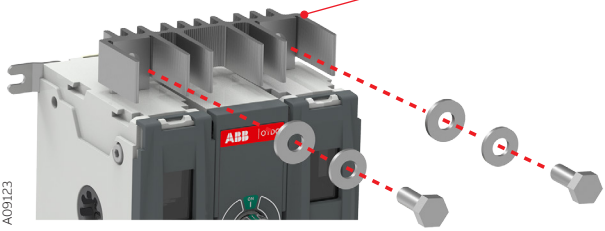

OTDCKIT250GS11
For use with
OTDC100...250_G_22
OTDC100...250_G_02S
OTDC100...250_G_12
OTDC100...250_G_21

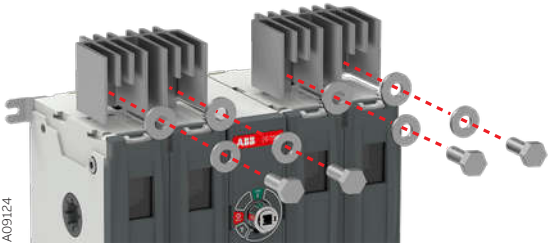

Terminal shroud kit
OTDCS200GG1

1x



Weaken shrouds seam of removable partion by bending shroud according to the pictures on the right and remove the partion with combination pliers or by hand.

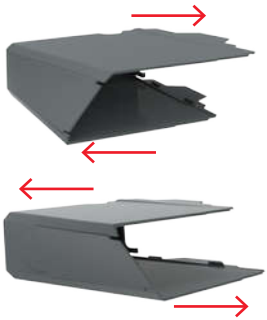



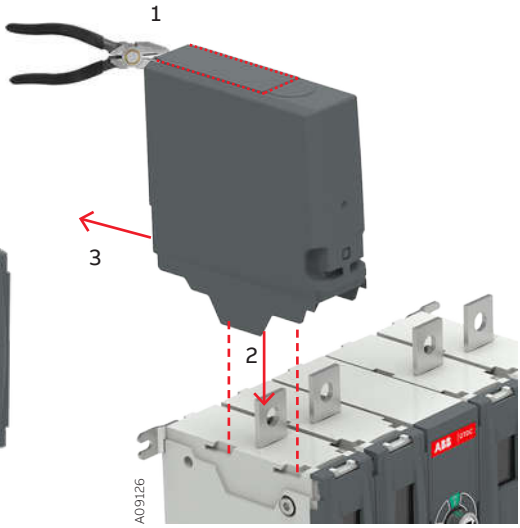

Information
Shroud suitable with all mechanical lugs OZXA252/3, compression lugs and busbars.

Accessory	Description
Terminal shroud kit	OTDCS200GG1

Auxiliary contacts
OA_

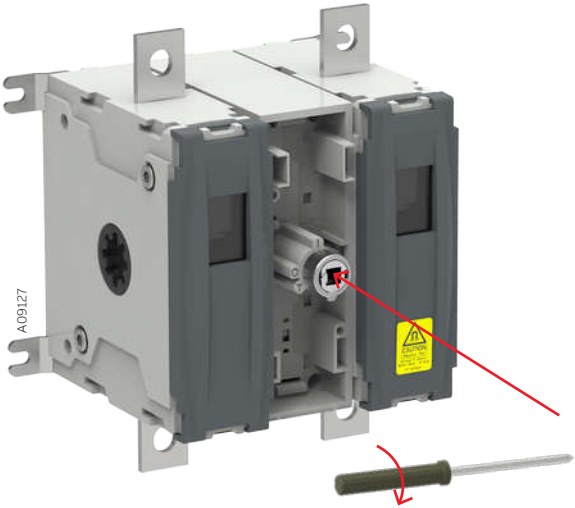



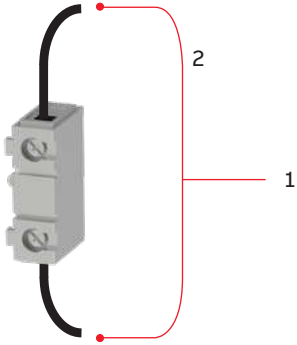

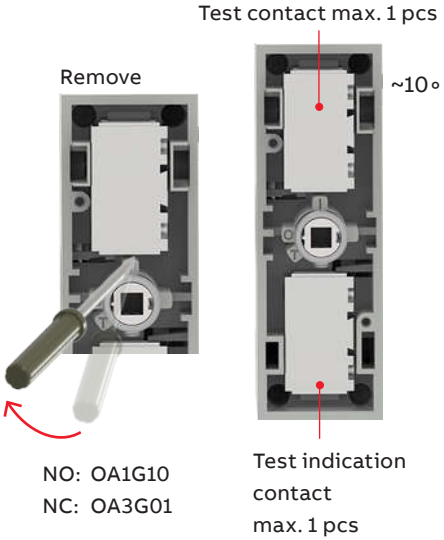

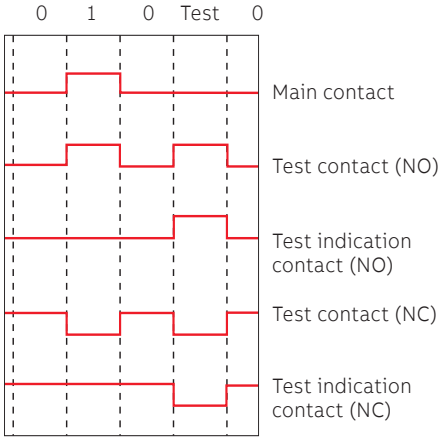

Dimension drawings

OTDC100...250_G_11

mm / in

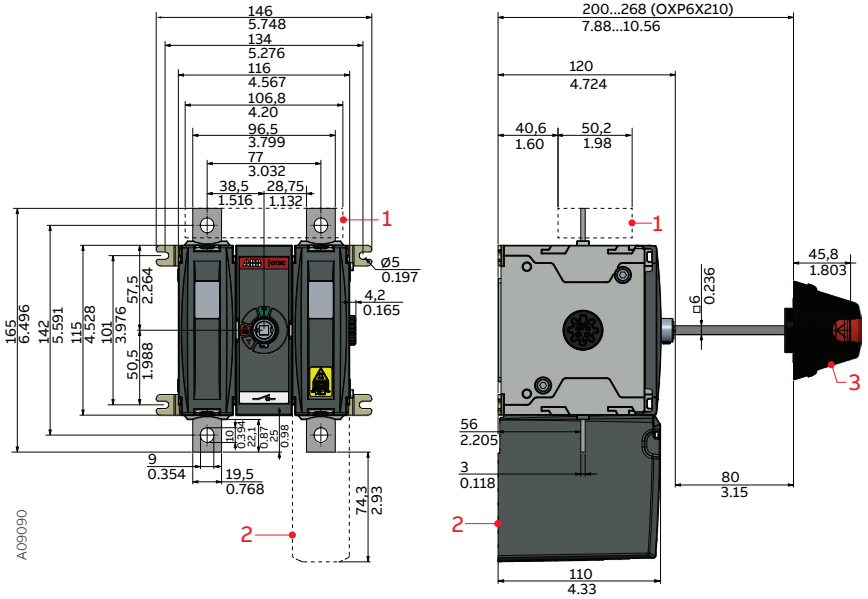

Pos.	Accessory	Description
1	Connection bar kit	OTDCKIT250GS101
2	Terminal shroud	OTDCS200GG1
3	Handle	OH_65

Dimension drawings

OTDC100...250_G_12

mm / in

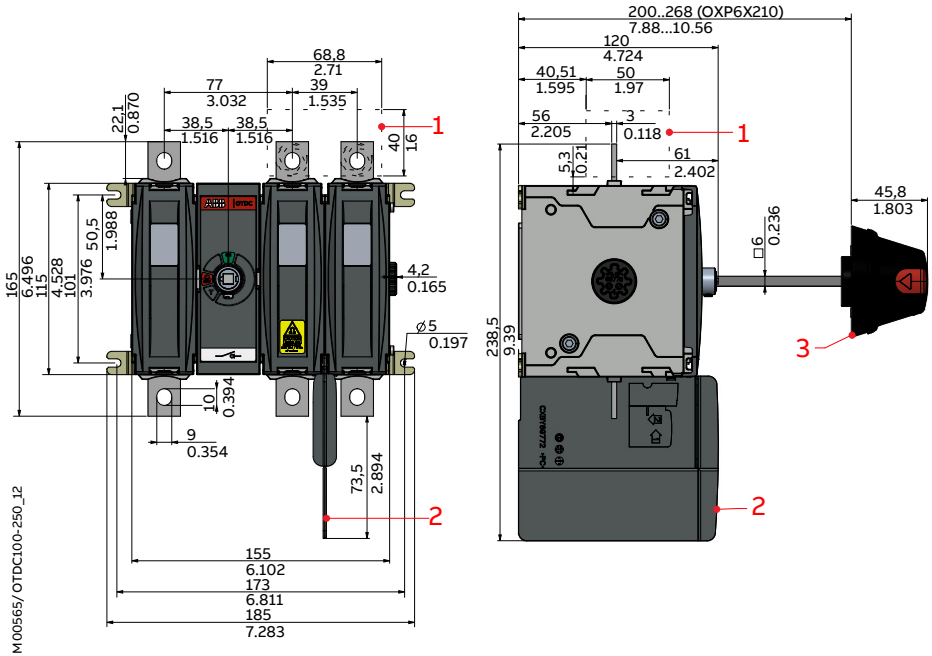

Pos.	Accessory	Description
1	Connection bar kit	OTDCKIT250GS11
2	Phase barrier	OTDCB200/2
3	Handle	OH_65

Dimension drawings

OTDC100...250_G_21

mm / in

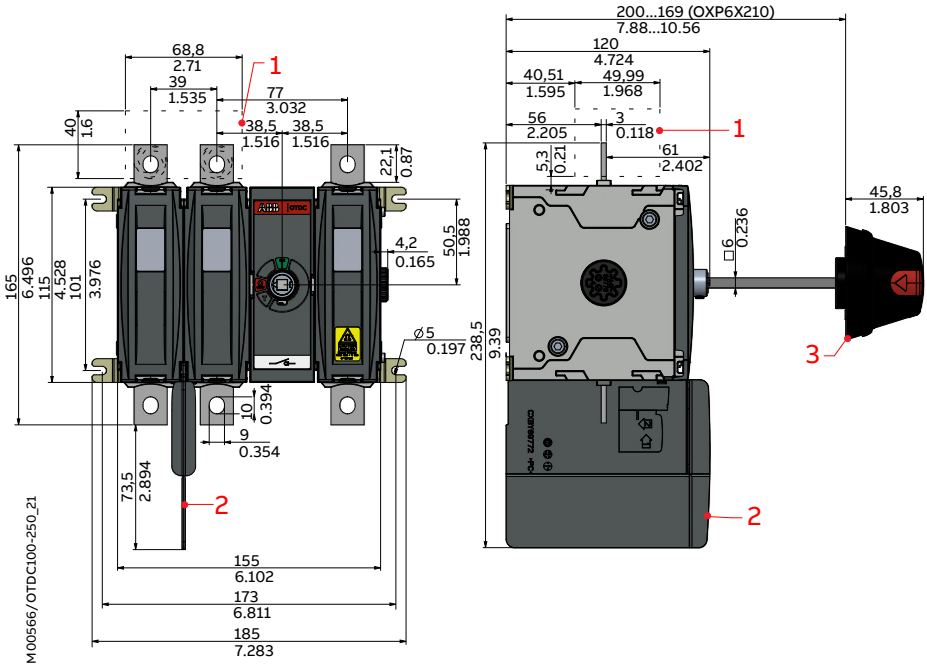

Pos.	Accessory	Description
1	Connection bar kit	OTDCKIT250GS11
2	Phase barrier	OTDCB200/2
3	Handle	OH_65

Dimension drawings

OTDC100...250_G_22

mm / in

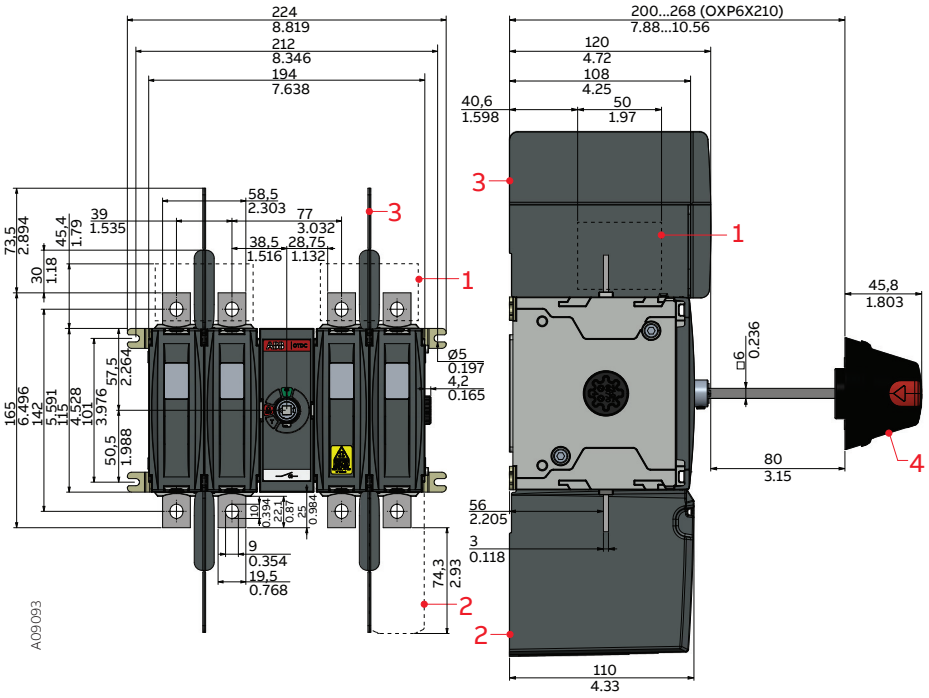

Pos.	Accessory	Description
1	Connection bar kit	OTDCKIT250GS11
2	Terminal shroud	OTDCS200GG1
3	Phase barrier	OTDCB200/2
4	Handle	OH_65

Dimension drawings

OTDC100...250_G_02S

mm / in

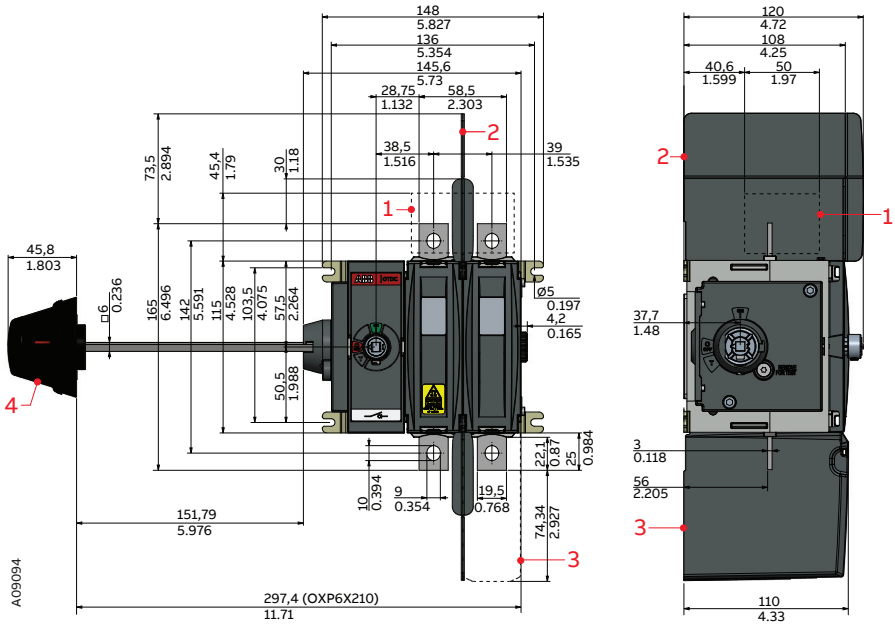

Pos.	Accessory	Description
1	Connection bar kit	OTDCKIT250GS11
2	Terminal shroud	OTDCS200GG1
3	Phase barrier	OTDCB200/2
4	Handle	OH_65

Dimension drawings
OTDC100...250_G_K

mm / in

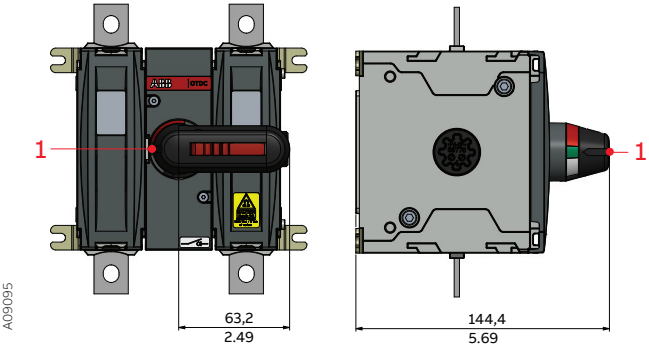

Pos.	Accessory	Description
1	Handle	OTDV200GK

Dimension drawings
OTDC kits

mm / in

OTDCKIT250GS101

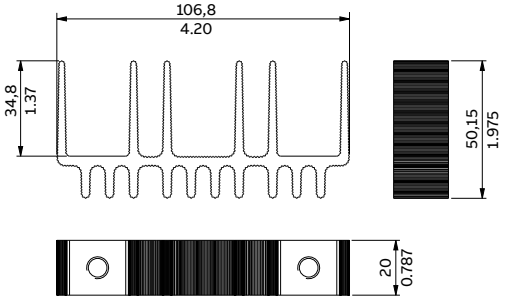

OTDCKIT250GS11

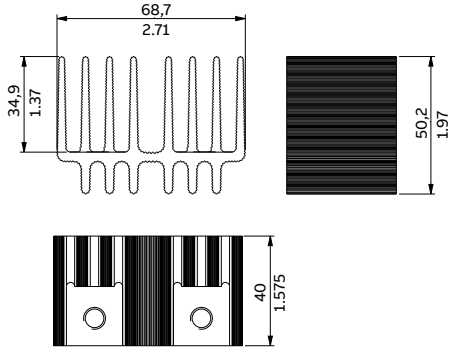



BG Внимание! Опасно напрежение! Да се монтира само от лице с електротехническа квалификация.
CN 警告！电压危险！只能由专业电工进行安装。
CZ Varování! Nebezpečné napětí! Montáž smí provádět výhradně elektrotechnik!
DA Advarsel! Farlig elektrisk spænding! Installation må kun foretages af personer med elektroteknisk ekspertise.
DE Warnung! Gefährliche Spannung! Installation nur durch elektrotechnische Fachkraft.
EL Προειδοποίηση! Υψηλή τάση! Η εγκατάσταση *πρέπει* να γίνεται μόνο από εξειδικευμένους ηλεκτροτεχνικούς.
EN Warning! Hazardous voltage! Installation by person with electrotechnical expertise only.
ES ¡Advertencia! ¡Tensión peligrosa! La instalación deberá ser realizada únicamente por electricistas especializados.
ET Hoiatus! Ohtlik pinge. Paigaldada võib ainult elektrotehnika-alane ekspert.
FI Varoitus! Vaarallinen jännite! Asennuksen voi tehdä vain sähköalan ammattihenkilö.
FR Avertissement! Tension électrique dangereuse! Installation uniquement par des personnes qualifiées en électrotechnique.
HR Upozorenje! Opasan napon! Postavljati smije samo elektrotehnički stručnjak.
HU Figyelmeztetés! Veszélyes feszültség! Csak elektrotechnikai tapasztalattal rendelkező szakember helyezheti üzembe.
IE Rabhadh! Voltas guaiseach! Ba chóir do dhuine ag a bhfuil saineolas leictriteicniúil, agus an té sin amháin, é seo a shuiteáil.
IT Avvertenza! Tensione pericolosa! Fare installare solo da un elettricista qualificato.
LT Dėmesio! Pavojinga įtampa! Dirbti leidžiama tik elektrotechniko patirties turintiems asmenims.
LV Uzmanību! Bīstami - elektrība! Montāžas darbus drīkst veikt tikai personas, kurām ir atbilstošas elektrotehniskās zināšanas.
MT Twissija! Vultaġġ perikoluż! Għandu jiġi installat biss minn persuna b'kompetenza elettroteknika.
NL Waarschuwing! Gevaarlijke spanning! Mag alleen geïnstalleerd worden door een deskundige elektrotechnicus.
NO Advarsel! Farlig spenning! Montering skal kun utføres av kvalifiserte personer med elektrokompetanse.
PL Ostrzeżenie! Niebezpieczne napięcie! Instalacji może dokonać wyłącznie osoba z fachową wiedzą w dziedzinie elektrotechniki.
PT Aviso! Tensão perigosa! A instalação só deve ser realizada por um eletricista especializado.
RO Avertizare! Tensiune periculoasă! Instalarea trebuie efectuată numai de către o persoană cu experienţă în electrotehnică.
RU Осторожно! Опасное напряжение! Монтаж должен выполняться только специалистом-электриком.
SE Varning! Farlig spänning! Installation får endast utföras av en elektriker.
SK Varovanie! Nebezpečné napätie! Montáž môže vykonávať iba skúsený elektrotechnik.
SL Opozorilo! Nevarna napetost! Vgradnjo lahko opravi le oseba z elektrotehničnim strokovnim znanjem.

Contact us

ABB Oy
P.O. Box 622
FI-65101 Vaasa
Finland

abb.com/lowvoltage

UK importer: ABB Limited
Tower Court
Coventry CV6 5NX
United Kingdom

© Copyright 2023 ABB. All rights reserved.
Specifications subject to change without notice.

34QTDC_G rev. E/ 1SCC301106M0201 # 27.03.2023