ATC blade fuses



Product description:

A range of UL Recognized fast-acting ATC blade fuses for automotive and low-voltage control circuits.

Featuring the same form, fit, and electrical and performance characteristics, ATC fuses are available in a variety of housing materials specific to orderable catalog numbers to meet application needs.

Features and benefits:

- Industry standard color coding for quick identification of amp rating.
- Tin-plated zinc terminals for corrosion resistance and enhanced conductivity.
- UL Recognized for use in low voltage control circuits.
- Wide -40°C to +100°C operating temperature range meets the needs of extreme environments.
- Lead free, halogen free and RoHS complaint.
- Test points on specific part/package numbers may speed up circuit troubleshooting.

Bussmann
by EATON

Catalog Symbol: ATC-_

Applications:

- Automotive and low-voltage control circuits.

Ratings:

- Volts: 32V
- Amps: 1-40A
- Interrupting Rating: 1kA

Agency information:

- UL Recognized File E56412, Guide JFHR2, UL 248-1 (1-40A).
- ISO 8820-3 / SAE J1284 / JASO 612 (1-40A).
- SAE J1171 (Ignition Protection) see catalog number tables for specific orderable product.

Materials:

- Terminals — Tin-plated zinc
- Element — Tin-plated zinc
- Housing (see catalog number tables for specific housing materials)
- Housing flammability rating — UL 94

Environmental:

- Operating Temperature Range -40°C to 100°C, 95% RH non-condensing.
- Storage Temperature Range -5°C to 35°C or lower, 85% RH non-condensing.

Basic part numbers*

Part number (amp)	Color code	Part number (amp)	Color code
ATC-1	Black	ATC-15	Blue
ATC-2	Gray	ATC-20	Yellow
ATC-3	Violet	ATC-25	Clear
ATC-4	Pink	ATC-30	Green
ATC-5	Tan	ATC-35	Blue/Green
ATC-7½	Brown	ATC-40	Orange
ATC-10	Red		

* See catalog number tables on page four for specific construction, housing material and package availability.

Electrical Characteristics @23°C* for all available catalog numbers

	Operating time (sec)	
% of fuse amp rating	Min	Max
110	100 Hrs	—
135	0.75	120 (240**)
160	0.25	50
200	0.15	5
350	0.04	0.5
600	0.02	0.1

* Fuse derating with change in ambient temperature = -0.15% / 1°C

** 135% Operating time of less than 4 amps.

Recommended fuse panels, holders and fuseclips

Part no.	Description	Max amps	Lead wire length/size
15600-_-20	ATC Fuse panel in 4- to 20-poles	20A	—
HHC	Yellow, water resistant in-line fuse holder	20A	2x4"/#16
HHD	Black, heavy-duty in-line fuse holder	30A	2x4"/#12
HHF	Black, in-line fuse holder w/cover	20A	2x4"/#14
HHG	Black, heavy-duty in-line fuse holder w/cover	30A	2x4"/#12
HHR	Heavy-duty, water resistant in-line fuse holder	30A	2x5"/#12
BP/HHS-RP	Self-stripping in-line fuse holder	20A	#18 to #14
BP/HHA-RP	Add-A-Circuit Tap	10A	N/A
ATC-FHID	Illuminating in-line fuse holder	20A	2x6"/#16
1A5600*	PCB Fuseclip	20A	—
1A5780*	PCB Fuseclip	15A	—

* See Data Sheet # 2131 for details.

Dimensions - mm

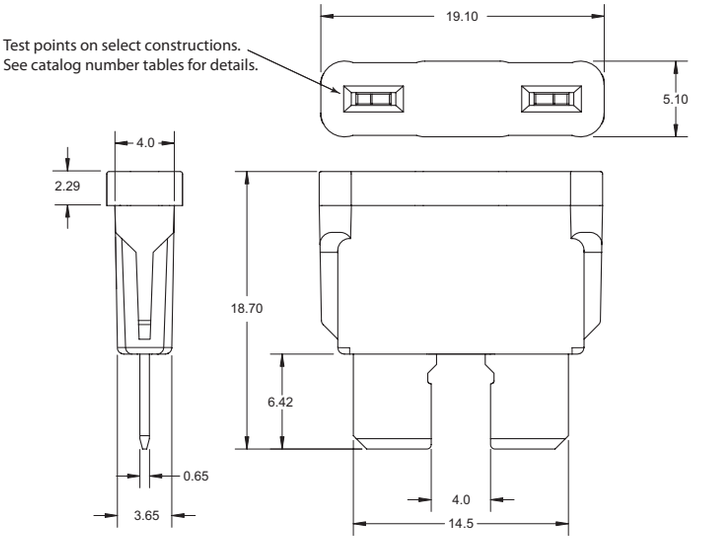

Dimensions shown are basic for all ampacities, constructions and housing materials.

Time-current characteristic curves — average melt - for all fuse constructions/housing materials

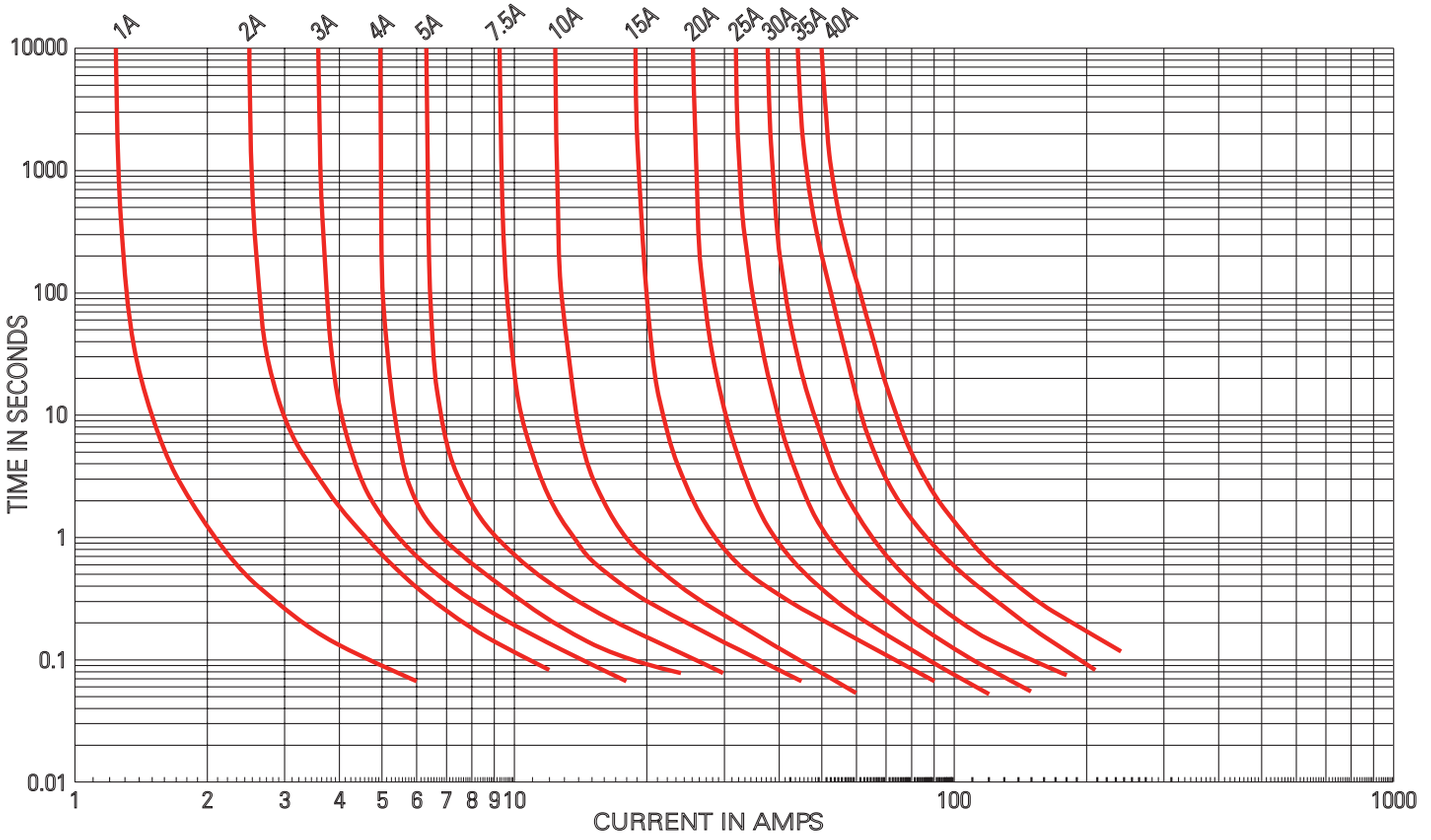

ATC fuse construction and housing material availability by catalog number

Table 1. ATC fuse catalog number availability for open body housing without test points*

Reload	Bulk packs	Blister packs	Value packs	Assortments/kits/trays	Housing material
ATC-5RLD	BK/ATC-5	BP/ATC-5-RP	VP/ATC-5-RP	BP/ATC-A5-RP (fuse assortment)	Nylon
ATC-7½RLD	BK/ATC-7½	BP/ATC-7½-RP	VP/ATC-7½-RP	BP/ATC-AH8-RPP (fuse emergency kit)	Nylon
ATC-10RLD	BK/ATC-10	BP/ATC-10-RP	VP/ATC-10-RP	BP/ATC-AL8-RP (low amp assortment)	Nylon
ATC-15RLD	BK/ATC-15	BP/ATC-15-RP	VP/ATC-15-RP	DIA-1 (diagnostic kit)	Nylon
ATC-20RLD	BK/ATC-20	BP/ATC-20-RP	VP/ATC-20-RP	NO.44 (fuse emergancy kit)	Nylon
ATC-25RLD	BK/ATC-25	BP/ATC-25-RP	VP/ATC-25-RP	NO.80 (bulk assortment)	Nylon
ATC-30RLD	BK/ATC-30	BP/ATC-30-RP	VP/ATC-30-RP	NO.95BK (ATC/ATM bulk assortment)	Nylon
—	—	—	—	NO.53 (ATC/MAX fuse emergency kit)	Nylon
				NO.160BK (bulk assortment)	Nylon
				NO.225 (tilt bin assortment)	Nylon
				CDY10TRY-ATC (fuse tray)	Nylon

* For specific quantities and amp ratings, see consumer aftermarket product catalog no. 5084.

Table 2. ATC fuse catalog number availability for closed body housing with test points and SAE J1171 ignition protected

Reload	Bulk packs*	Blister packs	5-in tins**	Assortments	Housing material
—	BK/ATC-1	BP/ATC-1-RP	ATC-1	—	Polycarbonate
—	BK/ATC-2	BP/ATC-2-RP	ATC-2	—	Polycarbonate
ATC-3RLD	BK/ATC-3	BP/ATC-3-RP	ATC-3	—	Polycarbonate
ATC-4RLD	BK/ATC-4	BP/ATC-4-RP	ATC-4	—	Polycarbonate
—	BK/ATC-5M	—	ATC-5	—	Polycarbonate
—	BK/ATC-7½M	—	ATC-7½	—	Polycarbonate
—	BK/ATC-10M	—	ATC-10	—	Polycarbonate
—	BK/ATC-15M	—	ATC-15	—	Polycarbonate
—	BK-ATC-20M	—	ATC-20	—	Polycarbonate
—	BK-ATC-25M	—	ATC-25	—	Polycarbonate
—	BK-ATC-30M	—	ATC-30	—	Polycarbonate
—	BK-ATC-35	—	ATC-35	—	Polysulfone
—	BK-ATC-40	BP/ATC-40-RP	ATC-40	—	Polyethersulfone
—	—	—	—	NO.290***	—

* 2000 fuses per pack
** 5 fuses per tin
*** Contains one 5-in tin each of ATC 3, 4, 5, 7-1/2, 10, 15, 20, 25, 30, 35 and 40A. See poly material column for details on the fuses in each tin of this assortment.

The only controlled copy of this Data Sheet is the electronic read-only version located on the Bussmann Network Drive. All other copies of this document are by definition uncontrolled. This bulletin is intended to clearly present comprehensive product data and provide technical information that will help the end user with design applications. Bussmann reserves the right, without notice, to change design or construction of any products and to discontinue or limit distribution of any products. Bussmann also reserves the right to change or update, without notice, any technical information contained in this bulletin. Once a product has been selected, it should be tested by the user in all possible applications.

Eaton's Bussmann Business
114 Old State Road
Ellisville, MO 63021
United States
www.bussmann.com

© 2014 Eaton
All Rights Reserved
Publication No. 2009 - BU-SB14727
October 2014

Eaton is a registered trademark.

All other trademarks are property of their respective owners.

Powering Business Worldwide