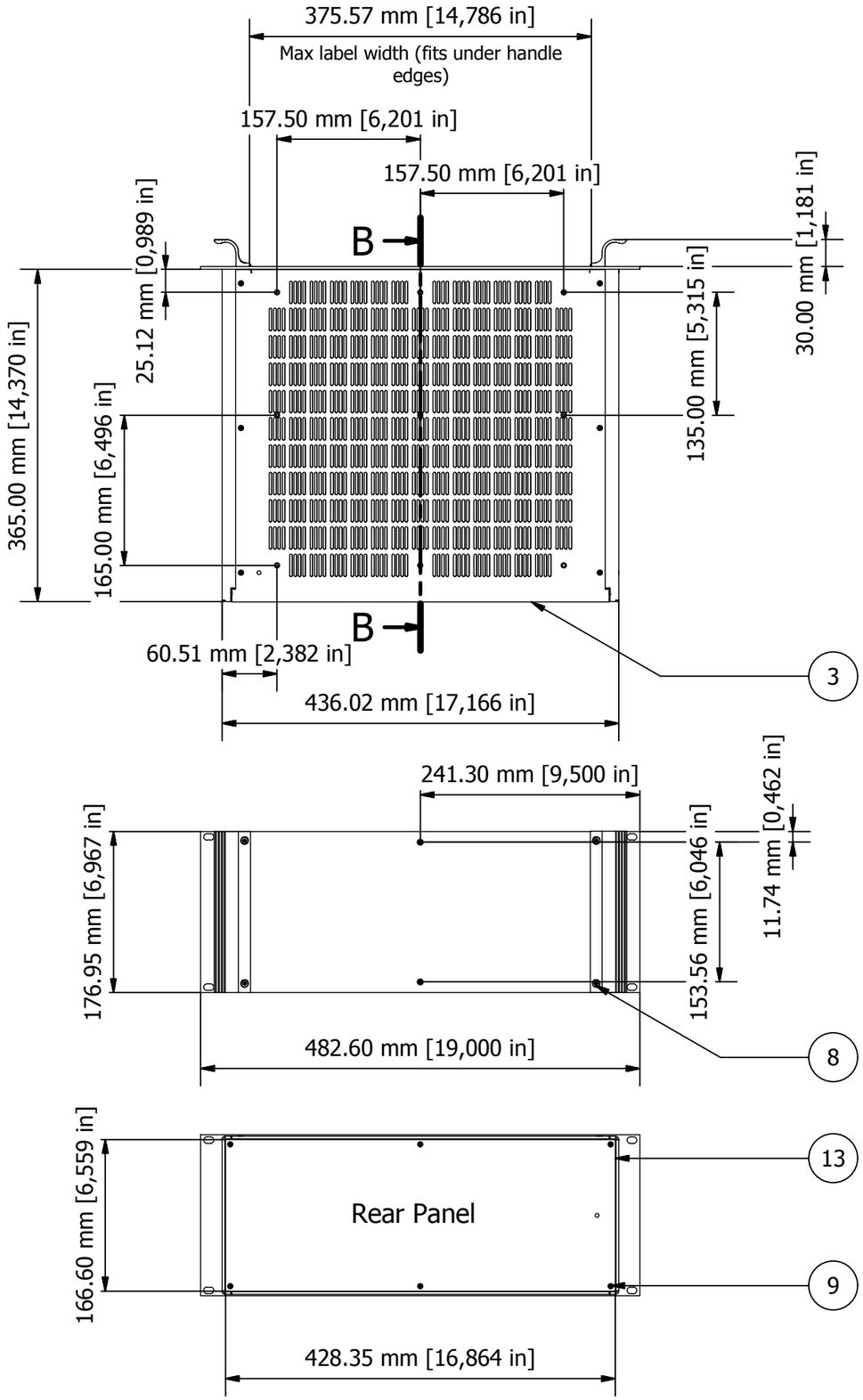

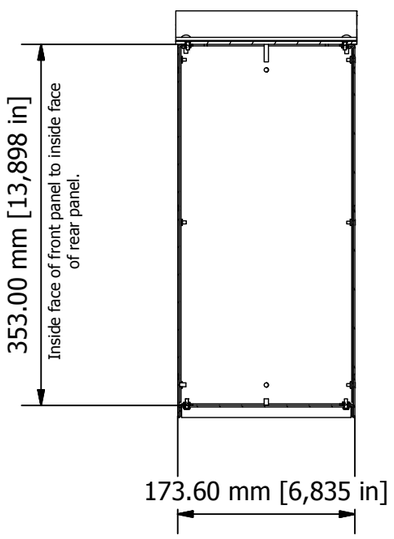

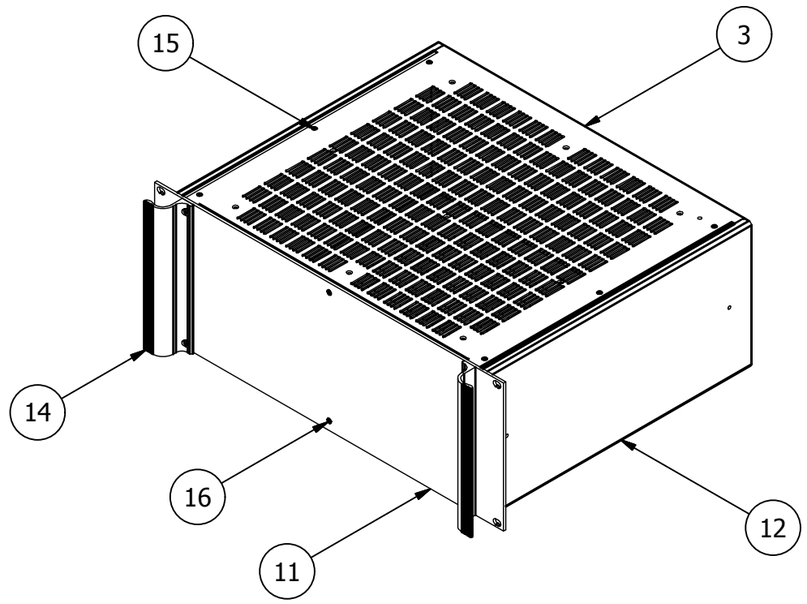

NOTES.

Case metalwork is made from 1.5 mm aluminium and painted RAL 9005 fine texture black.
Front panel is made from 3 mm aluminium with a clear etch & anodise finish.
Handles are made from an aluminium extrusion & also painted RAL 9005 fine texture black.
All parts are fitted with M4 studs for earth use.

PARTS LIST			
ITEM	QTY	PART NUMBER	DESCRIPTION
3	2	M6203069	Top/Base Cover
8	4	M4x16 CSK Screw (B)	Front Panel Screws
9	6	M3x8 Pan Screw (B)	Rear Panel Screws
11	1	M6219040	Front Panel
12	2	M6202459	Side Panels
13	1	M6201049	Rear Panel
14	2	M6200409	Handles
15	12	M3x8 CSK Screw (B)	Cover Screws
16	2	M3x8 CSK Screw	Front Panel Screws

FIRST ANGLE PROJECTION

Designed by	Description	Date	Scale
L Clark	Combimet 4U x 19" x 365 mm Vented	11/10/2013	1:6

METCASE ENCLOSURES
15 Brunel Way, Segensworth East, Fareham, Hampshire, PO15 5TX, UK.
Tel: +44 (0)1489 583858 Email: metcase@okw.co.uk
www.metcase.com

Part Number	Issue	Sheet
M6219469	1	1 / 1

© OKW Enclosures Ltd (Date as shown). This drawing contains proprietary information of OKW Enclosures Ltd and is tendered subject to the following conditions. The information be retained in confidence, not be reproduced or copied, and not be used or incorporated in any product, unless permission is obtained in writing from OKW Enclosures Ltd.