Datasheet

Bayonet adaptor

EBD10-M10X100



Part Number : EBD10-M10X100

Product description : Bayonet adaptor Ø10 M10X100 for temperature sensor.

Product detail : Bayonet adaptor for temperature sensor, thermocouple J,K or T for plastic manufacturing, bayonet Ø10 mm threading M10X100

SPECIFICATIONS

Attribut	Value
Accessorie Type :	Bayonet adaptors
Using with :	thermocouple sensor type J or K with bayonet adjustement
Threading :	M10X100
Minimum Temperature :	0°C
Maximum Temperature :	+350°C
Material :	nickel brass plated
Norm :	RoHS compliance

Embases *de raccordement*



Références	Ø (mm)	Filetage
EBD10-M8X100	10	M8 x 100
EBD10-M10X100	10	M10 x 100
EBD10-M10X150	10	M10 x 150
EBD10-M12X100	10	M12 x 100
EBD10-M12X175	10	M12 x 175
EBD10-M14X150	10	M14 x 150
EBD10-M14X200	10	M14 x 200
EBD10-1/8GC	10	1/8" GC
EBD10-1/4GC	10	1/8" GC

Références	Ø (mm)	Filetage
EBD12-M10X150	12	M10 x 150
EBD12-M12X175	12	M12 x 175
EBD12-1/4GC	12	1/4" GC
EBD12-3/8GC	12	3/8"GC
EBD12-M10X100	12	M10 x 100
EBD12-M12X100	12	M12 x 100
EBD12-M14X150	12	M14x150
EBD14-M14x150	14	M14x150
EBD15-M12x100	15	M12x100
EBD15-1/4GC	15	1/4" GC
EBD16-1/4GC	16	1/4" GC

Bride de fixation *en fonte*



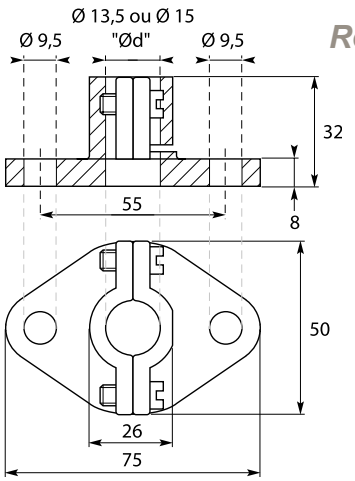

Réf. BRD "Ød"

Ø 13,5 mm	13,5
Ø 15 mm	15

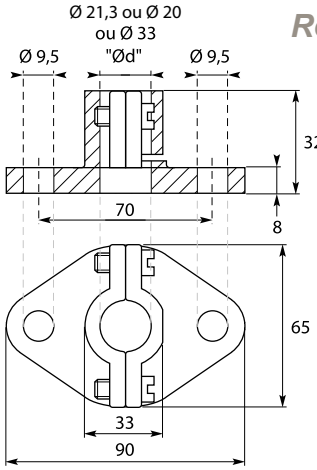

Réf. BRD

Ø 20 mm	20
Ø 21,3 mm	21,3
Ø 33 mm	33

Bride circulaire *en aluminium*



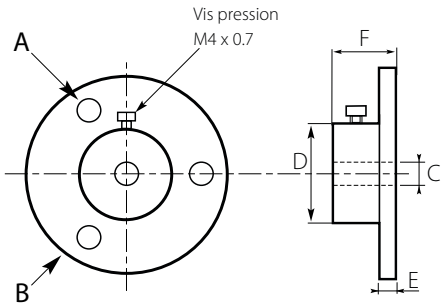

Ø de passage
Réf. BRD -A

6
8

Réf.	A	B	C	D	E	F
BRD8-A	7	75	8.1	25	3	25
BRD6-A	4.6	50	6.1	20	5.2	15.5

Bride de fixation *en inox*



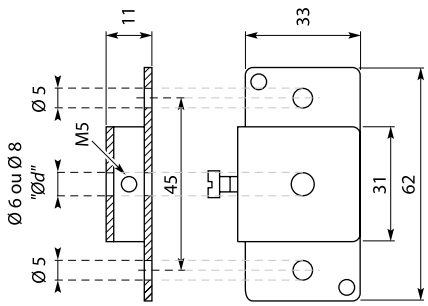

"Ød"
Réf. BRD -I

Ø 6 mm	Ø6
Ø 8 mm	Ø8