Fulleon fire alarm devices
Product catalogue

Fulleon

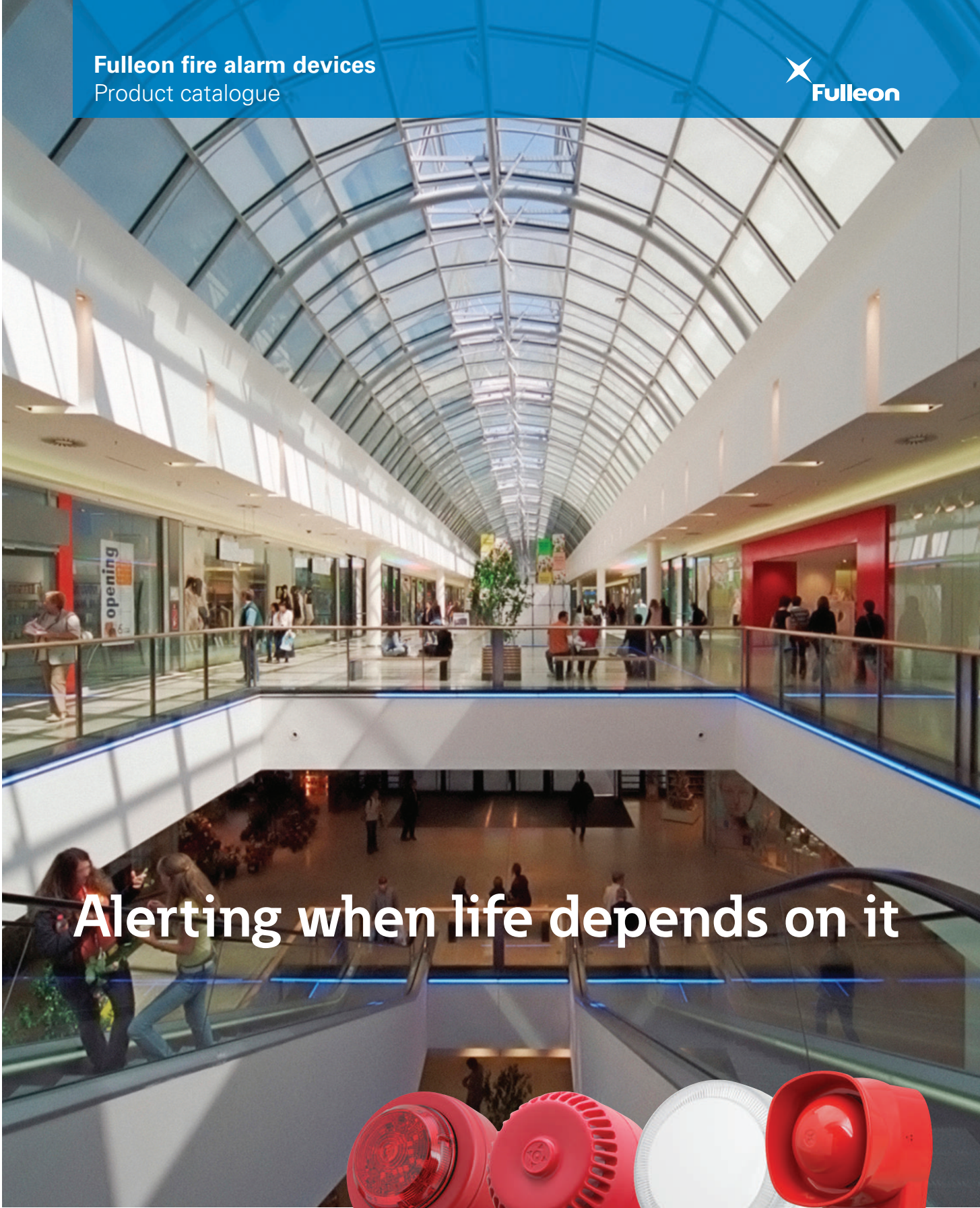

Alerting when life depends on it

EATON
Powering Business Worldwide






Eaton and Cooper united.

Energizing a world that demands more.

We deliver:

- **Electrical solutions** that use less energy, improve power reliability and make the places we live and work safer and more comfortable
- **Hydraulic and electrical solutions** that enable machines to deliver more productivity without wasting power
- **Aerospace solutions** that make aircraft lighter, safer and less costly to operate, and help airports operate more efficiently
- **Vehicle drivetrain and powertrain solutions** that deliver more power to cars, trucks and buses, while reducing fuel consumption and emissions

Discover today's Eaton.

Powering business worldwide

As a global power management company, we help customers worldwide manage the power needed for buildings, aircraft, trucks, cars, machinery and businesses.

Eaton's innovative technologies help customers manage electrical, hydraulic and mechanical power more reliably, efficiently, safely and sustainably.

We provide integrated solutions that help make energy, in all its forms, more practical and accessible.

With 2013 sales of $22 billion, Eaton has approximately 100,000 employees around the world and sells products in more than 175 countries.

Eaton.com

EATON

Powering Business Worldwide

Innovation that leads the World

From globally certified fire alarm sounders, beacons and sounder beacons to robust industrial signaling products, Eaton's Fulleon product line provides solutions to protect life and property for commercial and industrial applications.

Fulleon products have a reputation for constancy and reliability, and are the first choice for many companies looking for quality, compliance and risk free installation.

Expertise built on experience

The Fulleon product line is managed out of our UK facility in South Wales. All major functions are based on the one site including Design, Engineering, Manufacturing and Customer Services, ensuring a quick resolution to any questions you may have in regard to the status of your product or order.

05 Sounders



17 Beacons



23 Sounder Beacons



35 Call Points



41 Bells



45 Indicators



49 Bases & Power Supplies



55 Door Retainers



63 Signboards



69 UL & FM Approved



KEY

VdS Approved

Loss Prevention Certification Board Approval

Underwriters Laboratories Approval

Xpress Delivery Available

Marine Equipment Directive (MED)

CERTIFIED TO EN54-23 Certified to EN54-23

(WP) = Weatherproof
(d) = Deep / U Base
(s) = Shallow Base



Sounders for all applications

The Fulleon sounder portfolio is suitable for a wide variety of applications. The range includes the market leading RoLP sounder and the ultra low current Symphoni range, through to industrial sounders and bells.

All sounders are designed for easy installation and to fit with the majority of system applications.

06 RoLP



07 RoLP Maxi



08 CS200



09 Askari Compact



10 Symphoni



11 Symphoni High Output



12 Symphoni Voice +



13 SQG3



14 Asserta Maxi



15 Asserta Midi



Sounders

RoLP



The Roshni Low Profile (RoLP) is the fire alarm markets leading conventional sounder, although it finds uses in many applications, such as security, general signalling and process alarms.

With its recognisable body, wide operating voltage and international reputation for quality, the RoLP is a flexible sounder suitable for use in most applications.

Features

- 102dB(A) sound output
- 32 tones (user selectable)
- Two stage alarm
- Automatic synchronisation

Benefits

- Ideal for general signalling and Fire use
- Fire approved and general signalling tone options
- Alert and alarm function
- Improved tone clarity, reducing confusion

Technical Specification

Voltage	9-15Vdc 18-28Vdc
Current	12mA (Typical Tone 3)
Sound Output	102dB(A) (Typical Tone 3)
Tones	32
Volume	Control 10dB
Monitoring	Reverse polarity
Temperature	- 25°C to + 70°C
Protection	IP54 (s)* IP65 (d)*
Construction	ABS
Weight	0.25Kg
Colours	Red or white

(s)* Shallow Base
(d)* Deep / U Base

Dimensions

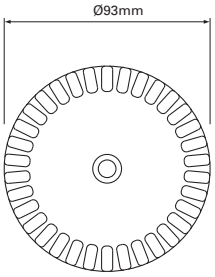

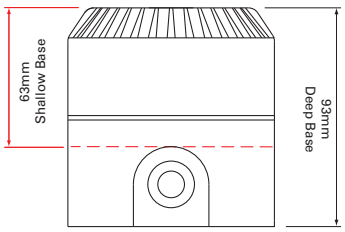

RoLP White



Catalogue Numbers

Reference	Cat No	Description
ROLP/SV/R/S	540501FULL-0389X	RoLP, Shallow Base, Red Body
ROLP/SV/W/S	540502FULL-0406X	RoLP, Shallow Base, White Body
ROLP/SV/R/D	540503FULL-0403X	RoLP, Deep Base, Red Body
ROLP/SV/W/D	540504FULL-0410X	RoLP, Deep Base, White Body
ROLP/SV/R/U	540505FULL-0390X	RoLP, U - Base, Red Body
ROLP/SV/W/U	540506FULL-0441X	RoLP, U - Base, White Body



The RoLP Maxi is a higher output version of the well known market leading RoLP sounder. The adoption of new smart technology has allowed six key alarm tones to achieve 106dB(A), providing a more powerful fire sounder for increased recognition in louder environments.

Features

- 106dB(A) sound output
- 32 tones (user selectable)
- Two stage alarm
- Automatic synchronisation

Benefits

- Ideal for high ambient noise areas
- Fire approved and general signalling tone options
- Alert and alarm function
- Improved tone clarity, reducing confusion

Technical Specification

Voltage	9-15Vdc 18-28Vdc
Current	40mA (Typical Tone 3)
Sound	Output 106dB(A) (Typical Tone 3)
Tones	32
Volume	Control 10dB
Monitoring	Reverse polarity
Temperature	- 25°C to + 70°C
Protection	IP54 (s)* IP65 (d)*
Construction	ABS
Weight	0.25Kg
Colours	Red or white

(s)* Shallow Base
(d)* Deep / U Base

Dimensions

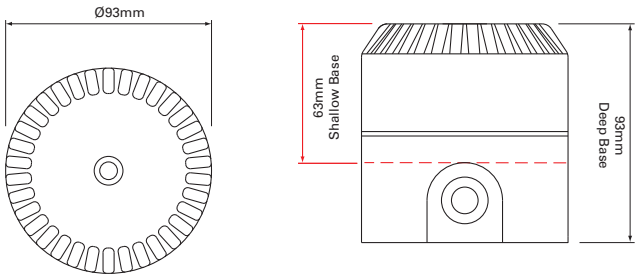

RoLP Maxi White



Catalogue Numbers

Reference	Cat No	Description
ROLPX/SV/R/S	540527FULL-0396X	RoLP Maxi Shallow Base Red Body
ROLPX/SV/R/D	540576FULL-0779X	RoLP Maxi Deep Base Red Body
ROLPX/SV/W/S	540577FULL-0786X	RoLP Maxi Shallow Base White Body
ROLPX/SV/W/D	540578FULL-0781X	RoLP Maxi Deep Base White Body

Sounders

CS200



The CS 200 is an entry level sounder suitable for fire, security or general signalling applications. The clip-fit base allows for a number of wiring options and enables simple installation.

Features

- 32 tones (user selectable)
- 12V or 24V option
- Secure clip fit base
- Volume control

Benefits

- Fire approved and general signalling tone options
- For fire and security use
- Quick fitting for easy installation
- Reduce the sound output by 10dB

Technical Specification

Voltage	18-28Vdc
Current	13mA (Typical Tone 3)
Sound Output	100dB(A) (Typical Tone 3)
Tones	32
Volume Control	10dB
Monitoring	Reverse polarity
Temperature	- 10°C to + 55°C
Protection	IP21C
Construction	ABS
Weight	0.24Kg
Colour	Red or white

Dimensions

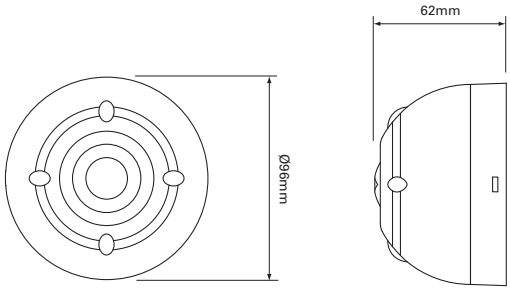

Catalogue Numbers

Reference	Cat No	Description
CS200/SV/R/32	547013FULL-0772X	CS200, Red, 32 Tones

VdS



The Askari Compact is a discrete sounder for flush or surface fixing. The innovative design provides an excellent combination of high sound output and attractive aesthetics, ideal for retail, hotel and residential applications.

Features

- 32 tones (user selectable)
- Automatic synchronisation
- Two stage alarm
- Discrete design

Benefits

- 6 tones certified for fire use
- Improved tone clarity, reducing confusion
- Alert and alarm function
- Can be flush or surface fixed

Technical Specification

Voltage	9-15Vdc 18-28Vdc
Current	18 mA (Typical Tone 3)
Sound Output	97dB(A) (Typical Tone 3)
Tones	32
Volume Control	10dB
Monitoring	Reverse polarity
Temperature	- 10ºC to + 55ºC
Protection	IP21C (with back box)
Construction	ABS
Weight	0.11Kg
Colours	Red or white

Dimensions

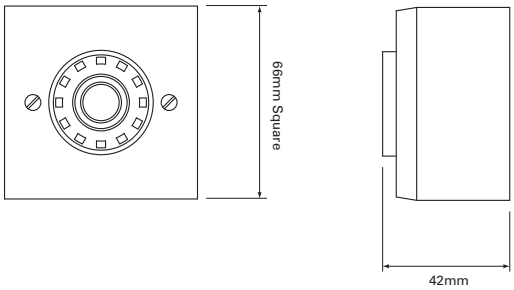

Askari Compact Red



Catalogue Numbers

Reference	Cat No	Description
AC/SV/R/S/BB	550068FULL-0142X	Askari Compact Sounder, Red, Surface(BB), Tone select switch, Volume control
AC/SV/W/S/BB	550072FULL-0216X	Askari Compact Sounder, White, Surface(BB), Tone select switch, Volume control

Sounders

Symphoni



The Symphoni is an extremely efficient wall sounder well suited for large installations where ultra-low current is critical. There is a standard version, providing UK alarm tones and an "E" version that has tones including the German DIN tone and the Netherlands Slow Whoop.

An IP66 rated WP version is also available.

Features

- Low 5mA current consumption
- 100dB(A)
- Automatic synchronisation
- Weatherproof option

Benefits

- Maximises the number of devices on a system
- Certified for Fire use
- Improved tone clarity, reducing confusion
- Suitable for outdoor use

Technical Specification

Voltage	18 - 30Vdc
Current	5mA
Sound Output	100dB(A)
Tones	3
Volume Control	10dB
Monitoring	Reverse polarity
Temperature	- 10°C to + 55°C - 25°C to + 70°C (WP)
Protection	IP21C, IP66 (WP)
Construction	ABS
Weight	0.21Kg, 0.32Kg (WP)
Colours	Red or white

Dimensions

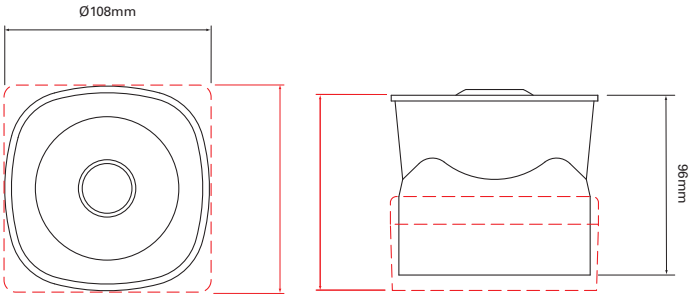

WP version white



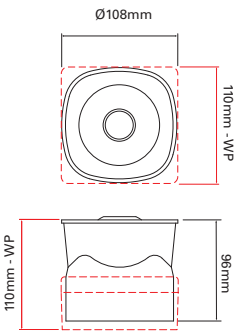

Catalogue Numbers

Reference	Cat No	Description
SY/R	650001FULL-0003X	Symphoni Sounder Red
SY/W1	650002FULL-0004X	Symphoni Sounder White
SY/R/E	650008FULL-0073X	Symphoni Sounder, Red, European tone version
SY/W1/E	650009FULL-0074X	Symphoni Sounder, Signal White, European tone version
SY/IP/W	654036FULL-0225X	Symphoni Sounder, White, WP IP66



Compact design delivering up to 120dB the Symphoni High Output provides an ideal solution to your signalling challenges. Producing levels of up to 120dB(A) this sounder can be used in open areas or in situations having higher than normal background noise levels. Despite its high output the unit is efficient and offers relatively low current consumption.

An IP66 rated WP version is also available.

Features

- High output up to 120dB(A)
- Two stage alarm
- 32 tones (user selectable)
- Weatherproof option

Benefits

- Ideal for high noise environments
- Alert and alarm function
- 6 tones certified for fire use
- Suitable for outdoor use

Technical Specification

Voltage	18 - 28Vdc
Current	240mA (Typical Tone 3)
Sound Output	114dB(A) (Typical Tone 3) 120dB(A) (Typical Tone 6)
Tones	32
Volume Control	20dB
Monitoring	Reverse polarity
Temperature	- 10°C to + 55°C - 25°C to + 70°C (WP)
Protection	IP21C, IP66 (WP)
Construction	ABS, PC lens
Weight	0.58Kg, 0.68Kg (WP)
Colours	Red or white

Dimensions

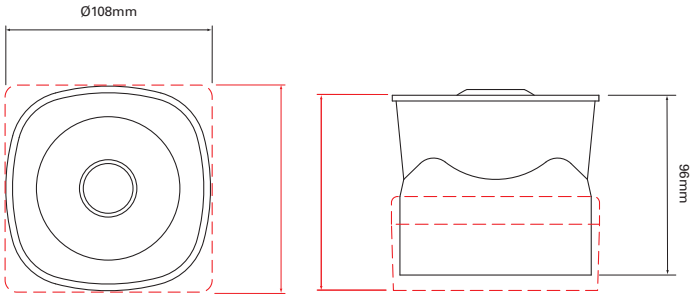

WP version white



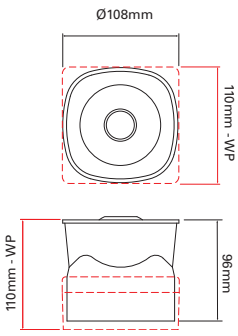

Catalogue Numbers

Reference	Cat No	Description
SY/HO/R	651004FULL-0009X	Symphoni High Output Sounder, Red Body
SY/HO/W1	651003FULL-0008X	Symphoni High Output Sounder, White Body
SYHO/R/IP	651012FULL-0057X	Symphoni High Output Sounder, Red Body, IP66 Version
SYHO/GW/IP	650022FULL-1029X	Symphoni High Output Sounder, White Body, WP IP66 Version

VdS

voice+



The Symphoni Voice+ is an ultra-low current sounder that can be supplied with up to 16 voice messages. Normally the unit is loaded with 3 commonly used messages. The sounder also has international tones available and a user selectable setting so that messages can be played without the use of a tone.

Features

- Up to 16 messages
- 7 user selectable tones
- Bespoke message creation
- Low 4mA current consumption

Benefits

- Fire, alert and general warning messages available
- Easy to configure at installation
- Any message, in any language
- Maximises the number of units on a circuit

Technical Specification

Voltage	9 - 60Vdc
Current	4mA Low 8mA High
Sound Output	100dB(A) Typical
Tones	7 user selectable + no tone option
Volume Control	10dB
Monitoring	Reverse polarity
Temperature	- 10°C to +55°C - 25°C to +70°C (WP)
Protection	IP21C, IP33C (WP)
Construction	ABS
Weight	0.21Kg, 0.32Kg (WP)
Colours	Red or white

Dimensions

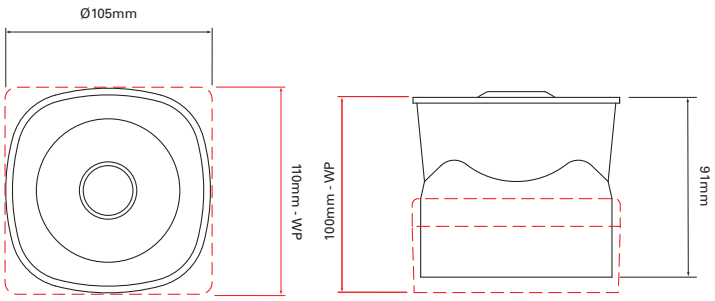

Symphoni Sounder White



Catalogue Numbers

Reference	Cat No	Description
SYV/R/V+ VP001ASY	680003FULL-0003X	Symphoni Voice Sounder, Red
SYV/W1/V+ VP0001ASY	680004FULL-0004X	Symphoni Voice Sounder, White

Contact customer service for details on how to order voice messages



The third generation Squashni G3 amalgamates the best features from the previous Squashni and Squashni Micro versions. The large flat surface allows the mounting of a large range of European detectors, while the high efficiency and low operating current permit compatibility with many systems.

Features

- Universal detector platform
- First fix base
- Low current consumption
- Tamper proof cap option

Benefits

- Fits the majority of detectors for increased flexibility
- Speeds up installation
- Maximises the number of devices on a system
- For use without a detector

Technical Specification

Voltage	18 - 28Vdc
Current	4/5mA
Sound Output	90dB(A)
Tones	8
Volume Control	10dB
Monitoring	Reverse polarity
Temperature	- 10ºC to + 55ºC
Protection	IP21C
Construction	ABS
Weight	0.16Kg
Colours	White

Dimensions

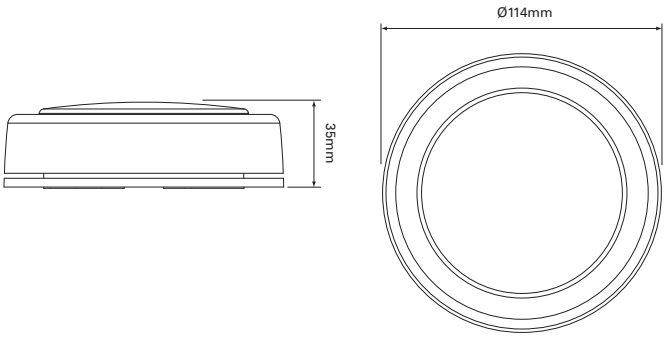

Catalogue Numbers

Reference	Cat No	Description
SQG3/SDR/W	666058FULL-0098X	Squashni G3 Sounder white

VdS

Sounders

Asserta Maxi



The 120dB (A) IP66 rated Asserta warning sounder is designed to cope with harsh environments where robustness is required for extra protection. Design features are incorporated to ensure safe and easy installation, while providing flexibility with fewer product variants.

Features

- Powerful 120dB(A) output
- 3 stage alarm and time out function
- 42 alarm tones
- Robust design with IP66 protection

Benefits

- Maximum sound output for high noise environments
- 3 levels of alarm for differing warning states
- Large range of tone options
- For demanding environments in non-hazardous areas

Dimensions

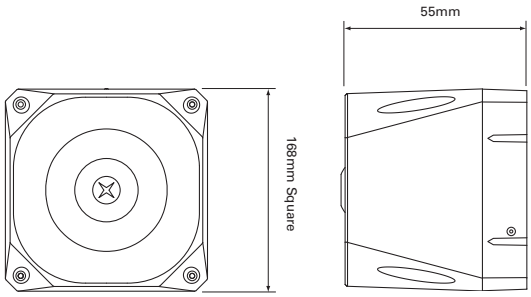

Technical Specification

Voltage	18 - 28Vdc
Current	120dB(A) - 450mA @ 24Vdc
Output	120dB(A) (Typical Tone 3)
Tones	42
Alarm Stages	3
Volume Control	10dB(A)
Time Out	5 mins - 40 mins (user selectable)
Monitoring	Reverse polarity (dc version)
Temperature	- 25°C to + 70°C
Protection	IP66
Construction	ABS
Weight	1.6Kg (dc version) 2.5Kg (mains version)
Colour	Red or grey

Asserta Maxi Grey



Catalogue Numbers

Reference	Cat No	Description
AS/S/24/120/R	7011124FUL-0012X	Asserta Sounder, 24V, Red, 120dB
AS/S/24/120/G	7092272FUL-0149X	Asserta Sounder, 24V, Grey, 120dB



The 111dB (A) IP66 rated Asserta Midi Sounder is a versatile, compact unit that has been designed for industrial environments or areas where there is a requirement for a physically robust alarm.

Features

- 111dB(A) output
- 32 Alarm tones
- 2 stage alarm
- Robust design with IP66 protection

Benefits

- Large range of tone options
- Alert and alarm function
- For demanding environments in non-hazardous area

Technical Specification

Voltage	9 - 60Vdc
Current	24mA @ 24Vdc (Typical Tone 3)
Sound Output	108dB(A) @ 24Vdc (Typical Tone 3)
Tones	32
Alarm Stages	2
Monitoring	Reverse polarity (dc only)
Temperature	- 25°C to + 70°C
Protection	IP66
Construction	ABS
Weight	0.5Kg (dc version) 0.7Kg (mains version)
Colour	Red or grey

Dimensions

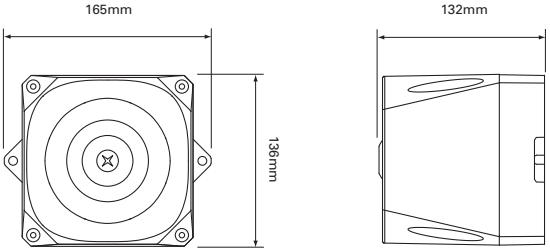

Asserta Midi Grey



Catalogue Numbers

Reference	Cat No	Description
AS/M/S/9-60V/R	7041134FUL-0020X	Asserta MIDI Sounder, Red, 9 to 60Vdc
AS/M/S/9-60/G	7041214FUL-0176X	Asserta MIDI Sounder, Grey, 9 to 60Vdc



Innovation through optical and LED technology

The market for Beacons is changing, within Europe the introduction of EN54-23 has required the development of a new range of powerful beacons able to deliver a higher light output to a given area of coverage. The Fulleon LX range is approved to the new standard and through its patented optics and innovative electronics, delivers a market leading current consumption of 10mA.

For areas outside Europe and for indication purposes within, the Solista Maxi and the Solex Xenon offer a tried and tested solution based on over 30 years of experience in beacon design.

Eaton has a wide range of resources to aid the adoption of EN 54-23. Visit the LX Range Resources section on **www.cooperfulleon.com** for further information.

18 Solista LX Wall



19 Solista LX Ceiling



20 Solista Maxi



21 Solex Xenon



Beacons

Solista LX Wall



The Solista LX Wall is suitable for a variety of applications, available in a red or white body and compatible with the full range of 6 bases.

A patented lens design distributes light to achieve the required illumination specified by EN 54-23, whilst using minimum current consumption.

Features

- Ultra low current consumption of 10mA
- Up to 7.5m room coverage
- 0.5Hz or 1Hz flash rate
- Coverage switch to 2.5m

Benefits

- Use where current consumption is a key consideration
- Ideal for bedrooms, bathrooms and toilets
- Switch flash rate to 0.5Hz to reduce current consumption
- Reduces power consumption by up to 50%

Dimensions

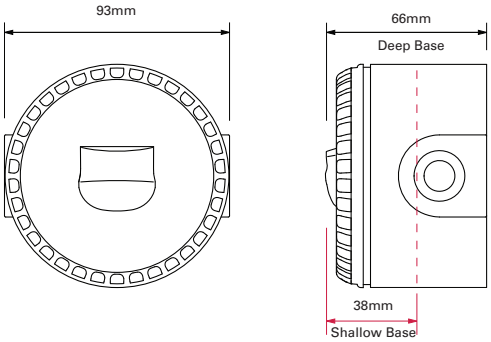

Technical Specification

Mounting Type	Wall
Voltage	9 - 60VDC
Current	10 - 25mA dependent on setting
Coverage (y)	7.5m (Switchable to 2.5m)*
Mounting Height (x)	2.4m (max)
Coverage Volume Code	W-2.4-7.5
Coverage Volume	135m^3 (15m^3)
Flash Rate	1Hz (Switchable to 0.5Hz)
Operating Temperature	-25°C to +70°C
Monitoring	Reverse Polarity
Protection	IP33C Shallow Base IP65 Deep and U Base
Weight	100g
Body Colour	White or Red
Flash Colour	White or Red

* CNPP test results

Solista LX Wall White



Catalogue Numbers

Reference	Cat No	Description
SOL-LX-W/WF/R1/S	812007FULL-0108X	Solista LX Wall, White Flash, Red Body, Shallow Base
SOL-LX-W/WF/R1/D	812008FULL-0109X	Solista LX Wall, White Flash, Red Body, Deep Base
SOL-LX-W/RF/R1/S	812013FULL-0114X	Solista LX Wall, Red Flash, Red Body, Shallow Base
SOL-LX-W/RF/R1/D	812005FULL-0107X	Solista LX Wall, Red Flash, Red Body, Deep Base
SOL-LX-W/RF/W1/S	812015FULL-0116X	Solista LX Wall, Red Flash, White Body, Shallow Base
SOL-LX-W/RF/W1/D	812016FULL-0117X	Solista LX Wall, Red Flash, White Body, Deep Base

For full list of part numbers, turn to page 79

VdS CERTIFIED TO EN54-23



The Solista LX Ceiling has a unique lens design that distributes the light in a cylindrical shape to achieve the required illumination specified by EN 54-23. Designed for installation at a height of up to 3m and with a discrete appearance, the device is ideal for a variety of applications, including bedrooms, bathrooms and toilets.

Features

- Ultra low current consumption of 10mA
- Up to 7.5m coverage volume
- 0.5Hz or 1Hz Flash rate
- Coverage switch to 3m

Benefits

- Use where current consumption is a key consideration
- Ideal for bedrooms, bathrooms and toilets
- Switch flash rate to 0.5Hz to reduce current consumption
- Reduces power consumption by up to 50%

Dimensions

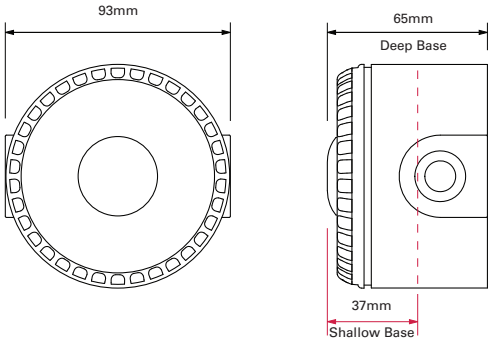

Technical Specification

Mounting Type	Ceiling
Voltage	9 - 60VDC
Current	10 - 25mA dependent on setting
Coverage (y)	7.5m (Switchable to 3m)*
Mounting Height (x)	3m (max)
Coverage Volume Code	C-3-7.5
Coverage Volume	132m^3 (21m^3)
Flash Rate	1Hz (Switchable to 0.5Hz)
Operating Temperature	-25°C to +70°C
Monitoring	Reverse Polarity
Protection	IP33C Shallow Base IP65 Deep and U Base
Weight	100g
Body Colour	White or Red
Flash Colour	White or Red

* CNPP test results

Catalogue Numbers

Reference	Cat No	Description
SOL-LX-C/WF/W1/S	812020FULL-0121X	Solista LX Ceiling, White Flash, White Body, Shallow Base
SOL-LX-C/WF/W1/D	812021FULL-0122X	Solista LX Ceiling, White Flash, White Body, Deep Base
SOL-LX-C/RF/W1/S	812022FULL-0123X	Solista LX Ceiling, Red Flash, White Body, Shallow Base
SOL-LX-C/RF/W1/D	812023FULL-0124X	Solista LX Ceiling, Red Flash, White Body, Deep Base

For full list of part numbers, turn to page 79

VdS CERTIFIED TO EN54-23

Beacons

Solista Maxi



The Solista Maxi is an attractive LED beacon that allows the user the choice between economy and performance. In the economy modes the Solista Maxi performs extremely efficiently requiring as little as 3mA, but it can be switched to attain a much higher light output where visibility is the prime objective. Even greater effectiveness can be achieved by selecting a double flash sequence.

Features

- Ultra low current consumption
- LED technology
- Long service life
- Compact size

Benefits

- Use where current consumption is a key consideration
- Ensures high efficiency and longer life
- Reduces the replacement costs
- Discrete option where building design is a priority

Dimensions

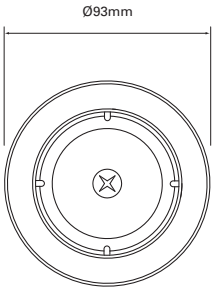

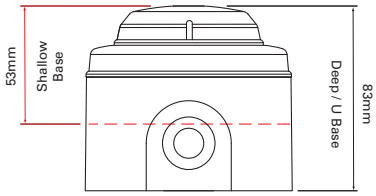

Technical Specification

Voltage	9 - 60Vdc
Current	3 / 5 / 15mA (user selectable)
Light Output	0.5 / 1 / 3cd (user selectable)
Flash Rate	Single flash @ 1Hz Double flash @ 1Hz Continuous (user selectable)
Monitoring	Reverse polarity
Temperature	- 10ºC to + 55ºC
Protection	IP21C (s)* IP65 (d)*
Construction	Base ABS, FR, PC lens
Weight	0.1Kg
Colour	Red or white
Flash colour	Red, amber, blue, green or white

(s)* Shallow Base
(d)* Deep / U Base

Solista Maxi White



Catalogue Numbers

Reference	Cat No	Description
SOLX/RF/RL/R/S	811021FULL-0037	Solista Maxi, Red Body, Red Flash, Red Lens, Shallow Base
SOLX/RF/RL/R/D	811020FULL-0036	Solista Maxi, Red Body, Red Flash, Red Lens, Deep Base
SOLX/RF/CL/R/S	811041FULL-0006	Solista Maxi, Red Body, Red Flash, Clear Lens, Shallow Base
SOLX/RF/CL/W/S	811023FULL-0039	Solista Maxi, White Body, Red Flash, Clear Lens, Shallow Base
SOLX/RF/RL/W/D	811024FULL-0040	Solista Maxi, White Body, Red Flash, Clear Lens, Deep Base

For full list of part numbers, turn to page 79



Due to its wide operating voltage and automatic synchronisation, the Solex beacon is a flexible solution for all types of alarm and monitoring systems.

Powered by Xenon technology, the Solex is a cost effective solution that can compliment audible alarms in high-noise environments.

Features

- 3 light output options
- 5 lens colour options
- 9-60V
- Anti-tamper switch option

Benefits

- Manage the current to suit your application
- Use for fire warning or general signalling
- Wide operating voltage for maximum flexibility
- For use where security is an issue (tamper switch)
- Increased visibility from wide viewing angle of flash
- Synchronised flash

Dimensions

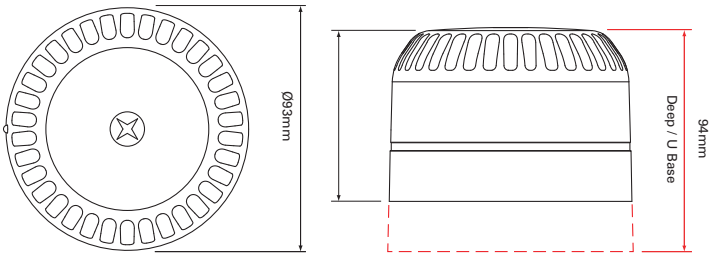

Technical Specification

Voltage	9 - 60Vdc
Current	40 / 88 / 240mA
Light Output	3 / 10 / 15cd
Flash Rate	Single flash @ 1Hz 60FPM
Monitoring	Reverse polarity
Temperature	- 25°C to + 70°C
Protection	IP21C (s)* IP65 (d)*
Construction	Base ABS, FR, PC lens
Weight	0.1Kg
Colour	Red or white base
Flash colour	Red, amber, blue, green or white

(s)* Shallow Base
(d)* Deep / U Base

Solex Amber - White Base



Catalogue Numbers

Reference	Cat No	Description
SO/R/SR/3C	531025FULL-0061	Solex Beacon, Red Lens, Red Body, Shallow Base, 3cd
SO/R/DR/3C	531025FULL-0087	Solex Beacon, Red Lens, Red Body, Deep Base, 3cd
SO/R/SR/10C	531024FULL-0060	Solex Beacon, Red Lens, Red Body, Shallow Base, 10cd
SO/R/DR/10C	531024FULL-0088	Solex Beacon, Red Lens, Red Body, Deep Base, 10cd
SO/R/SR/15C	531028FULL-0064	Solex Beacon, Red Lens, Red Body, Shallow Base, 15cd
SO/R/DR/15C	531028FULL-0111	Solex Beacon, Red Lens, Red Body, Deep Base, 15cd

For full list of part numbers, turn to page 79

VdS



Audible and visual signalling for Fire and Emergency Signalling

The combination of sound and light has been shown to improve awareness of an alarm by building occupants. The range of integrated sounder beacons from Eaton is suitable for a wide variety of applications and includes the new LX range, which was developed specifically to meet the new European beacon standard for fire alarms EN 54-23. The LX Range sounder beacons are based on the popular Rolp and Symphoni product platforms, providing reassuring quality and proven performance.

Innovation can be found with the Squashni LX base, designed to fit with most smoke detectors, it offers a light output that matches the footprint of a heat or smoke detector, reducing the number of devices requires, keeping costs down. For outside the E.U and for notification within, traditional sounder beacon solutions can be found within the Flashni range and for harsh environments, the Asserta, offering IP66 protection and a robust construction, making it suitable for safe area industrial applications.

Eaton has a wide range of resources to aid the adoption of EN 54-23. Visit the LX Range Resources section on **www.cooperfulleon.com** for further information.

24 RoLP LX Wall



25 Symphoni LX Wall



26 Squashni LX Base



27 Firecat



28 SQG3 AV



29 RoLP Solista



30 RoLP Solista Maxi



31 Flashni



32 Asserta Sounder Beacon



33 Asserta Midi Sounder Beacon



Sounder Beacons

RoLP LX Wall



The RoLP LX Wall is ideal for dual use applications where a visual alarm device is required in addition to an audible alarm.

Based on the popular Roshni product platform, the RoLP LX is a reliable, high performing VAD (Visual Alarm Device) that is certified to EN 54-23.

Recommended for wall use and requiring just one installation point, the RoLP LX Wall is also available as a base only for use with any standard RoLP sounder, including the high output RoLP Maxi sounder.

Features

- Ultra low current consumption
- RoLP and RoLP Maxi sounder options
- Up to 7.5m coverage volume (switchable to 2.5m)
- 0.5 or 1Hz flash rate

Benefits

- Use where current consumption is a key consideration
- Delivering up to 106dB(A) sound output
- Ideal for bedrooms, bathrooms and toilets
- Switch flash rate to 0.5Hz to reduce current consumption

Dimensions

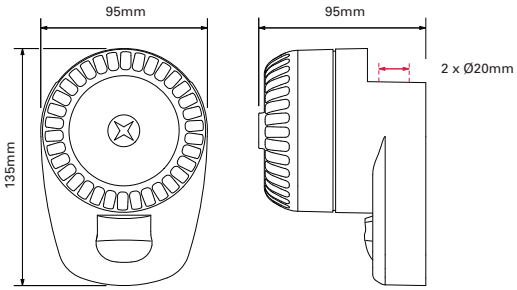

Technical Specification

Mounting	Wall
Voltage	18 - 28VDC (Fire Use) 9 - 15 VDC (Fire Use)
Current	22 - 37mA dependent on setting (Sounder and beacon; tone 3)
Coverage (y)	7.5m (Switchable to 2.5m)*
Mounting Height (x)	2.4m (max)
Coverage Volume Code	W-2.4-7.5
Coverage Volume	135m^3 (15m^3)
Flash Rate	1Hz (Switchable to 0.5Hz)
Operating Temperature	-25°C to +70°C
Monitoring	Reverse Polarity
Protection	IP65
Weight	200g
Body Colour	White or Red
Flash Colour	White or Red
Sound Output	102dB(A) (Typical tone 3 - RoLP)

* CNPP test results

RoLP LX Wall White



RoLP Base White



Catalogue Numbers

Reference	Cat No	Description
ROLP/W1/LX-W/RF	8500024FULL-0024X	RoLP LX Wall, Red Flash, White Body
ROLP/R1/LX-W/RF	8500025FULL-0025X	RoLP LX Wall, Red Flash, Red Body
ROLP/R1/LX-W/WF	8500023FULL-0023X	RoLP LX Wall, White Flash, Red Body
ROLPX/W1/LX-W/RF	8500029FULL-0029X	RoLP Maxi LX Wall, Red Flash, White Body
ROLPX/R1/LX-W/RF	8500030FULL-0030X	RoLP Maxi LX Wall, Red Flash, Red Body
ROLPX/R1/LX-W/WF	8500028FULL-0028X	RoLP Maxi, LX Wall, White Flash, Red Body

For full list of part numbers, turn to page 80

VdS CERTIFIED TO EN54-23



The Symphoni LX Wall is a durable sounder beacon that is certified to EN 54-23. Boasting impressive performance and a durable design, it ensures reliability and energy efficiency. Its high sound output makes it suitable for open areas or where there is higher than normal background noise. There is a standard version, providing UK alarm tones and an "E" version that has tones including the German DIN tone and the Netherlands Slow Whoop.

The Symphoni LX is also available as a 'base-only' variant, meaning existing Symphoni sounders can be retro-fitted into an EN 54-23 approved base.

Features

- Ultra low current consumption
- Up to 7.5m coverage volume (switchable to 2.5m)
- 0.5 or 1Hz Flash rate
- Coverage switch to 2.5m

Benefits

- Use where current consumption is a key consideration
- Ideal for bedrooms, bathrooms and toilets
- Switch flash rate to 0.5Hz to reduce current consumption
- Reduces power consumption by up to 50%

Dimensions

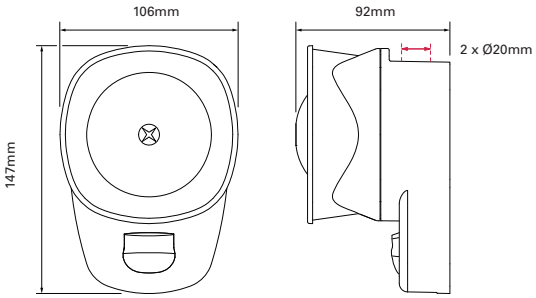

Technical Specification

Mounting	Wall
Voltage	18 - 28VDC (Fire Use)
Current	15 - 30mA dependent on setting (Sounder; tone 29)
Coverage (y)	7.5m (Switchable to 2.5m)
Mounting Height (x)	2.4m (max)
Coverage Volume Code	W-2.4-7.5
Coverage Volume	135 m^3 (15m^3)
Flash Rate	1Hz (Switchable to 0.5Hz)
Operating Temperature	-10°C to +55°C, -25°C to +70°C (WP)
Monitoring	Reverse Polarity
Protection	IP21C, IP66 (WP)
Weight	200g
Body Colour	White or Red
Flash Colour	White or Red
Sound Output	100dB(A) (Typical tone 29 - Symphoni)

Symphoni LX Wall WP

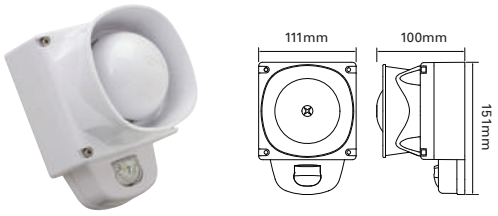

Catalogue Numbers

Reference	Cat No	Description
SYG1/LX-W/RF/W1	8500044FULL-0044X	Symphoni LX Wall, Red Flash, White Body
SYG1/LX-W/RF/R1	8500045FULL-0045X	Symphoni LX Wall, Red Flash, Red Body
SYG1/E/LX-W/RF/W1	8500054FULL-0054X	Symphoni LX Wall, Red Flash, White Body, European tone
SYG1/E/LX-W/RF/R1	8500055FULL-0055X	Symphoni LX Wall, Red Flash, Red Body, European tone
SYG1/LX-W/RF/R1/WP	8500050FULL-0050X	Symphoni WP LX Wall, Red Flash, Red Body
SYHO/LX-W/RF/R1	8500075FULL-0075X	Symphoni HO LX Wall, Red Flash, Red Body

Symphoni Voice+ LX Wall is available, with 16 voice messages, including international tones. Please contact customer services for more details.

VdS CERTIFIED TO EN54-23

Sounder Beacons

Squashni LX Base



The unique Squashni LX Base ceiling device refracts light around a smoke or heat detector to provide the required illumination demanded by EN 54-23.

Delivering a coverage volume radius of 15m, and a square area of 10.6m, the product is designed in line with the spacing specifications for both smoke and heat detectors.

The Squahsni's universal fitting means almost all detectors can be incorporated directly into the unit.

Approval pending

Features

- Up to 15m coverage
- Can be fitted with any standard detector
- LED technology
- White Flash

Benefits

- Ideal for large public areas
- Saves on installation costs
- Flash Rate Switch improves energy efficiency
- Flexibility in system design

Dimensions

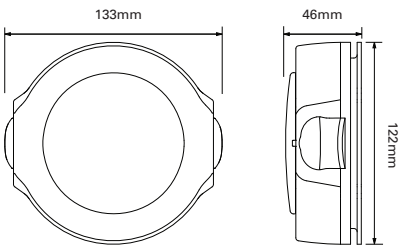

Technical Specification

Mounting type	Ceiling
Voltage	16 - 28 VDC (Fire Use) 9-15VDC (Fire Use) 9 - 28VDC (Non Fire Use)
Current:	65 - 130mA dependent on setting
Coverage (y)	15m (switchable to 5m)
Mounting Height (x)	3m (max)
Coverage Volume Code	C-3-15
Coverage Volume	530m^3 (58m^3)
Flash Rate	1Hz (Switchable to 0.5Hz)
Temperature	-10°C to +55°C
Monitoring	Reverse Polarity
Protection	IP21C
Weight	200g
Body Color	White or Red
Flash Colour	White
Sound Output	90dB(A) (Typical tone 3)

Catalogue Numbers

Reference	Cat No	Description
See website for more information		



The Firecat is an extremely flexible fire sensor for use with security or other systems operating at 12Vdc. The unit can be configured to operate either as an optical, optical-heat, rate of rise heat or fixed temperature heat sensor via selection switches at the rear. The sensor's output is via a relay with volt free contacts, which can be set to latch or auto-reset from the alarm condition. The sensor is also self monitoring so that in the event of a chamber failure or reaching the limit of its contamination compensating facility the LED will illuminate continuously yellow.

Features

- Multi-Function 12V fire sensor
- Compensates for chamber contamination
- User selectable sensing functions
- Base lock function
- Latching or auto resetting alarm relay
- Multifunctional LED indicator

Benefits

- Flexibility in mounting positions
- Modern design
- Meets majority of needs
- Release button and protection circuit
- Completed with damping keeper plate

Technical Specification

Voltage	10 - 16Vdc
Current	0.5 - 14mA
Monitoring	Self monitoring
Protection	Interior only
Construction	ABS, PC
Weight	0.08Kg
Colours	White
Sensing Options	Optical, Optical-heat, Heat rate of rise, Heat fixed temperature

Dimensions

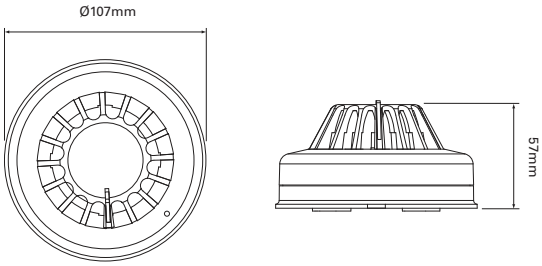

Catalogue Numbers

Reference	Cat No	Description
DETECTOR 12V	400001FULL-0001	12V Smoke Detector

Sounder Beacons

SQG3 AV



The SQG3 AV is a combined audible and visual base unit. The large flast surface allows the mounting of most popular European detectors, while the high efficiency and low operating current permit compatibility with many systems.

Features

- Fixing platform for most popular detectors
- Low current consumption
- Tamper proof cap for standalone use (supplied separately)
- First fix base for easier installation
- LED triggered option available

Benefits

- Save on installation costs
- Notification and detection in one unit

Technical Specification

Voltage	18 - 28Vdc
Current	4/5mA 9mA (AV version)
Sound Output	90dB(A)
Tones	8
Volume Control	10dB
Light Output	>1Cd
Flash Rate	1Hz
Monitoring	Reverse polarity
Temperature	- 10°C to + 55°C
Protection	IP21C
Construction	ABS ABS, PC lens (AV version)
Weight	0.16Kg
Colours	White
Flash Colour	Red

Dimensions

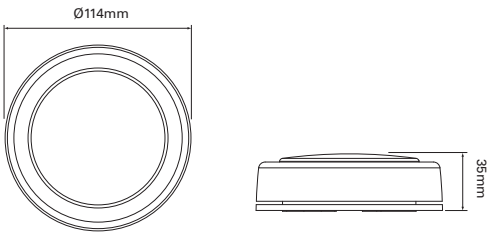

Catalogue Numbers

Reference	Cat No	Description
SQG3/AV/W	666057FULL-0097X	SQG3 Base AV, White



The RoLP Solista is a low current LED sounder beacon. The device is extremely efficient, making it ideal for notification purposes where sounder circuit capacity is limited.

Features

- Low current - LED technology
- Single installation point
- 32 tones (user selectable)
- Two stage alarm

Benefits

- Reduced current consumption vs. Xenon alternative
- Beacon and sounder in one package
- Alert and alarm function

Dimensions

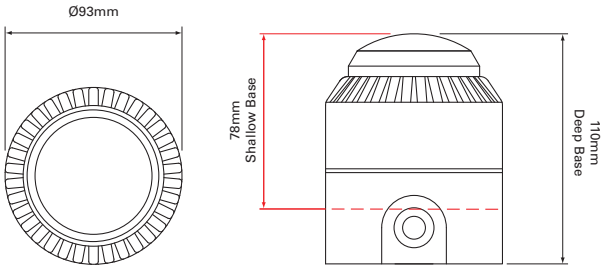

Technical Specification

Voltage	9 - 15Vdc 18 - 28Vdc
Current	15mA (Typical Tone 3)
Sound Output	102dB(A) (Typical Tone 3)
Tones	32
Light Output	> 0.5cd
Flash Rate	1Hz
Volume Control	10dB
Monitoring	Reverse polarity
Temperature	- 10°C to + 55°C
Protection	IP54 (s)* IP65 (d)*
Construction	ABS, PC lens
Weight	0.3Kg
Colours	Red or white
Flash Colour	Red

(s)* Shallow Base
(d)* Deep / U Base

RoLP Solista White



Catalogue Numbers

Reference	Cat No	Description
ROLPSB/SV/RL/R/S	8210112FULL-0015X	RoLP SB, Red LED Beacon, Red lens, Red body, Shallow base
ROLPSB/SV/RL/R/D	8210113FULL-0016X	RoLP SB, Red Body & Red LED Beacon, Deep base
ROLPSB/SV/RL/W/S	8210114FULL-0017X	RoLP SB, Red LED Beacon, Red lens, White body, Shallow base
ROLPSB/SV/RL/W/D	8210115FULL-0018X	RoLP SB, Red LED Beacon, Red lens, White body, Deep base
ROLPSB/SV/RL/R/N	8210111FULL-0004X	RoLP SB, Red LED Beacon, Red lens, Red body, No base
ROLPSB/SV/AL/W/D	8210125FULL-0007X	RoLP SB, Amber LED Beacon, Amber lens, White body, Deep base

VdS

Sounder Beacons

RoLP Solista Maxi



The RoLP Maxi Solista is an enhanced version RoLP Solista providing a higher sound output on six key alarm tones. This is an ideal audible and visual alarm for use where higher noise levels require the use of a more powerful sounder.

Features

- Low current – LED technology
- Single installation point
- 32 tones (user Selectable)
- Two stage alarm

Benefits

- Reduced current consumption vs. Xenon alternative
- Beacon and high output sounder in one package
- Alert and alarm function

Dimensions

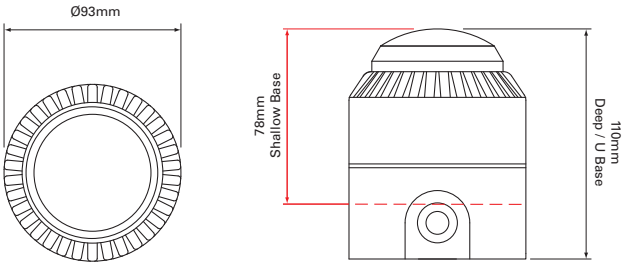

Technical Specification

Voltage	18 - 28Vdc
Current	43mA (Typical Tone 3)
Sound Output	106dB(A) (Typical Tone 3)
Tones	32
Light Output	> 0.5cd
Flash Rate	1Hz
Volume Control	10dB
Monitoring	Reverse polarity
Temperature	- 10°C to + 55°C
Protection	IP54 (s)* IP65 (d)*
Construction	ABS, PC lens
Weight	0.3Kg
Colours	Red or white
Flash Colour	Red

(s)* Shallow Base
(d)* Deep / U Base

RoLP Solista White



Catalogue Numbers

Reference	Cat No	Description
ROLPX/SV/SB/RL/R/S	8210119FULL-0001	RoLP Maxi Sounder Beacon, Red Lens, Red body, Shallow base
ROLPX/SV/SB/RL/R/D	8210130FULL-0002	RoLP Maxi Sounder Beacon, Amber lens, White body, Deep base
ROLPX/SV/SB/RL/R/U	8210121FULL-0003	RoLP Maxi Sounder Beacon, Red Lens, Red Body, U Base

VdS



The Flashni is an audible and visual device which requires one single installation point. This greatly reduces installation costs and is less obtrusive than two separate devices. Versions are available with the sounder and beacon linked, or with separate terminals for independent operation.

Features

- High output sounder beacon
- 12V, 24V and mains module option
- Choice of lens colour options
- Automatic sounder synchronisation

Benefits

- Up to 103dB(A) with built in Xenon flash
- Suitable for a variety of application
- Improved tone clarity, reducing confusion

Dimensions

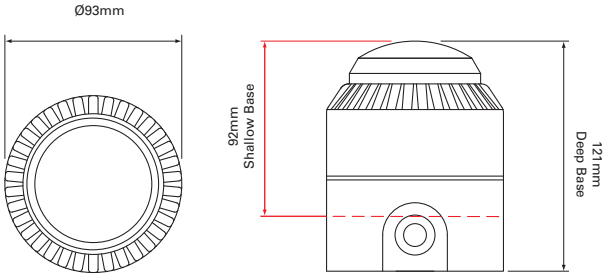

Technical Specification

Voltage	9 - 15Vdc (12V version) 18 - 28Vdc (24V version) (*1)
Current	110mA 12V version (Typical Tone 5) 68mA 24V version (Typical Tone 3)
Sound Output	103dB(A) 12V version (Typical Tone 5) 101dB(A) 24V version (Typical Tone 3)
Tones	Pre-set to tone 5 (12v) Pre-set to tone 3 (24v) (versions are available with user selectable tones)
Flash Power	0.7j
Flash Rate	1Hz
Volume Control	10dB
Monitoring	Reverse polarity
Temperature	- 10ºC to + 55ºC
Protection	IP54 (s)* IP65 (d)*
Construction	ABS, PC lens
Weight	0.33Kg
Colours	Red or white
Lens Colour	Red, amber, blue, green or clear

(s)* Shallow Base
(d)* Deep / U Base

Flashni White



Catalogue Numbers

Reference	Cat No	Description
FL/RL/R/S SWITCH	640025FULL-0061X	Flashni Sounder/Beacon, Red lens, Red body, Shallow base, Tone select switch
FL/RL/R/D SWITCH	640031FULL-0111X	Flashni Sounder/Beacon, Red lens, Red body, Deep base, Tone select switch
FL/AL/W/D SWITCH	640024FULL-0060X	Flashni Sounder/Beacon, Amber lens, White body, Deep base, Tone select switch
FL/RL/R/S 12V SND5	640204FULL-0067	Flashni 12V Sounder/Beacon, Red lens, Red body, Shallow base, tone 5
FL/RL/W/S 12V SND5	640202FULL-0039	Flashni 12V Sounder/Beacon, Red lens, White body, Shallow base, tone 5
FL/CL/W/D 12V SND5	640206FULL-0089	Flashni 12V Sounder/Beacon, Clear lens, White body, Deep base, tone 5

For full list of part numbers, turn to page 82

Sounder Beacons

Asserta Sounder Beacon



The 120dB (A) Asserta Industrial warning sounder beacon is designed to cope with harsh environments requiring protection to IP66. Design features are incorporated to ensure safe and easy installation, while providing flexibility with fewer product variants.

Features

- Powerful 120dB(A) output
- 3 stage alarm and time out function
- 42 alarm tones
- Asymmetric beacon

Benefits

- Maximum sound output for high noise environments
- 3 levels of alarm for differing warning states
- Large range of tone options
- Efficient use of light reduces current input generating the same light output as a 5j beacon

Dimensions

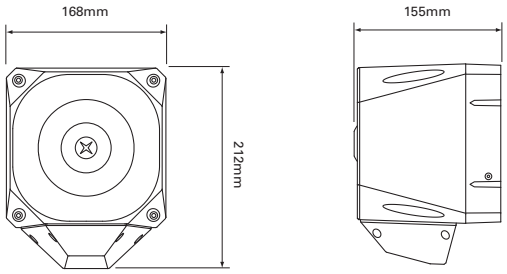

Technical Specification

Voltage	18 - 30Vdc 230Vac
Current Sounder	110dB(A) 105mA @ 24Vdc (Typical Tone 3) 120dB(A) 450mA @ 24Vdc (Typical Tone 3)
Current Beacon	120 - 620mA @ 24Vdc (dependant on setting)
Output	110dB(A) 120dB(A)
Tones	42
Alarm Stages	3
Flash Power	3.6j @ 24Vdc 2.0j @ 230Vac
Flash Rate	1Hz (adjustable on 24Vdc)
Monitoring	Reverse polarity (dc version)
Temperature	- 25°C to + 70°C
Protection	IP66
Construction	ABS, PC
Weight	1.8Kg (dc version) 2.5Kg (mains version)
Colour	Red or grey
Lens colour	Red, amber, blue or clear

Asserta Sounder Beacon Grey



Catalogue Numbers

Reference	Cat No	Description
AS/SB/24/120/R/RL	7021121FUL-0004X	Asserta Sounder/Beacon 24v Red 120dB Red Lens
AS/SB/24/120/G/AL	7092275FUL-0152X	Asserta Sounder/Beacon 24v Grey 120dB Amber Lens



The Asserta Midi Sounder Beacon is a versatile and rugged audio-visual alarm designed for industrial environments or areas where there is a requirement for a physically robust and well protected unit.

Features

- 112dB(A) output
- 32 alarm tones
- 2 stage alarm
- Asymmetric beacon

Benefits

- For Fire and general signalling use
- Large range of tone options
- Alert and alarm function
- Efficient use of light reduces current input generating the same light output as a 5j beacon

Dimensions

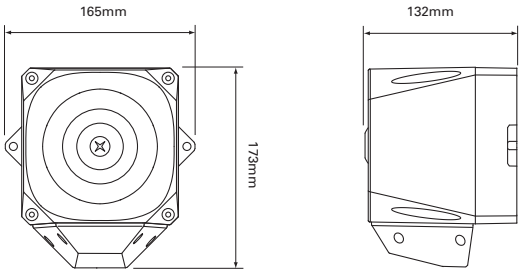

Technical Specification

Voltage	9 - 60Vdc
	115Vac
Current Sounder	23mA @ 24Vdc (Typical Tone 3)
Current Beacon	200mA @ 24Vdc
Sound Output	108dB(A) @ 24Vdc (Typical Tone 3)
Tones	32
Alarm Stages	2
Flash Power	2.5j
Flash Rate	1Hz
Monitoring	Reverse polarity (dc version)
Temperature	- 25°C to + 70°C
Protection	IP66
Construction	ABS
Weight	0.8Kg
Colour	Red or grey
Lens	Red, amber, blue or clear

Asserta Midi Sounder Beacon Grey



Catalogue Numbers

Reference	Cat No	Description
AS/M/SB/9-60V/R/RL	7051111FUL-0128X	Asserta MIDI Sounder Beacon, 9-60Vdc, Red Body, Red Lens
AS/M/SB/9-60/G/AL	7051212FUL-0015X	Asserta MIDI Sounder Beacon, 9-60Vdc, Grey Body, Amber Lens
AS/M/SB/115/R/RL	7054111FUL-0046	Asserta MIDI Sounder Beacon, 115Vac, Red Body, Red Lens
AS/M/SB/115/R/AL	7092266FUL-0142	Asserta MIDI Sounder Beacon, 115Vac, Grey Body, Amber Lens

For full list of part numbers, turn to page 83



Reliability when it matters most

Eaton's Fulleon business provides a range of manual call points designed to meet the needs of a diverse range of applications. The units incorporate features such as clip on covers and a light guide (LED) for improved visibility and user reassurance. A broad spectrum of accessories allows for a variety of wiring practices, while a number of colour variants cater for both fire and other safety related applications.

36 CXL



37 CXM



38 Key Switch



Call Points

CXL



The CXL Universal Call Point combines a number of features into one package, simplifying selection and reducing stock variants.

The CXL comes as standard with a plastic and glass element, and its integral LED indicators provides increased flexibility for diverse applications.

Features

- Choice of glass or plastic elements
- Changeover contacts
- Potted waterproof option
- Flag on re-settable element

Benefits

- Select element depending on location and user preference
- Wide range of usages
- Suitable for outdoor use
- Quick, visable alarm identification

Technical Specification

Voltage	Up to 30Vdc
Resistors	470 / 680
Element Type	Glass / Plastic (resettable)
Temperature	- 10°C to + 55°C - 25°C to + 70°C (WP)
Protection	IP24D, IP66 (WP)
Construction	ABS
Weight	0.19Kg, 0.22Kg (WP)
Colours	Red*

* Other colours available - minimum order required.

Dimensions

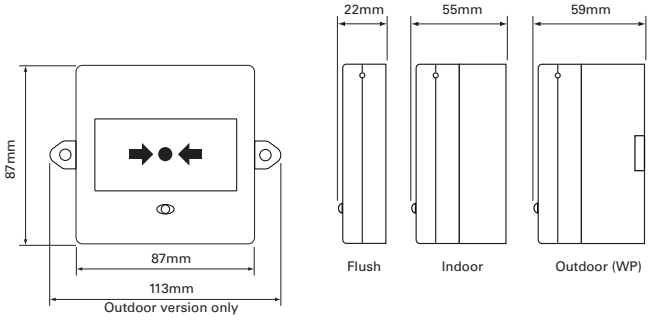

Call point range also available in different colours for non-fire applications



Catalogue Numbers

Reference	Cat No	Description
CXL/G/P/R/BB/470+680	4920016FULL-0018XC	Conventional 470R/680R with LED and back box. Includes both glass and Universal plastic resettable elements
CXL/G/P/R/BB/470+680 WP	4990047FULL-0420X	Conventional IP66 470R/680R with LED and back box. Includes both Universal glass and plastic resettable elements

For full list of part numbers, turn to page 83



The CXM has simple changeover contacts for use with a wide range of fire systems. The unit is supplied with both a glass and re-settable plastic element. The CXM is aimed at legacy systems.

Features

- Choice of glass or plastic elements
- Changeover contacts
- Potted waterproof option
- Flag on re-settable element

Benefits

- Select element depending on location and user preference
- Wide range of usages
- Suitable for outdoor use
- Quick, visable alarm identification

Technical Specification

Voltage	9 - 30Vdc
Current Rating	3A
Switching	SPCO
Element Type	Glass / Plastic (resettable)
Temperature	- 10°C to + 55°C - 25°C to + 70°C (WP)
Protection	IP24D, IP66 (WP)
Construction	ABS
Weight	0.19Kg, 0.22Kg (WP)
Colours	Red*

* Other colours available - minimum order required.

Dimensions

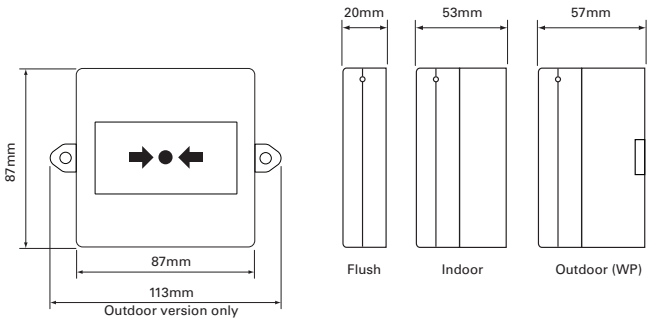

Call point range also available in different colours for non-fire applications



Catalogue Numbers

Reference	Cat No	Description
CXM/CO/GP/R/BB	4930010FUL-0048XC	Indoor call point, Red Body with back box, Glass element provided
CXM/CO/G/R/WP	4990073FULL-0122X	Weatherproof call point for outdoor use with IP66 backbox, Red body, Glass element provided.

For full list of part numbers, turn to page 83

Call Points

Key Switch



A key operated switch for secure locations where restricted access is required. Two position switches are available.

Features

- Clip fixing of front cover
- Key activation
- Suitable for use on systems up to 230Vac
- Two position switch

Benefits

- Secure and convenient
- Suitable for where restricted access is required
- Offers complete flexibility
- Highly versatile

Technical Specification

Voltage	9 - 30Vdc / 230Vac
Current Rating	10A @ 24Vdc 2A @ 230Vac
Switching	1 x NO contact 1 x NC contact
Operating Method	Key - removable
Temperature	- 10°C to + 55°C
Protection	IP24D
Construction	ABS
Weight	0.19Kg
Colours	Red*

* Other colours available - minimum order required.

Dimensions

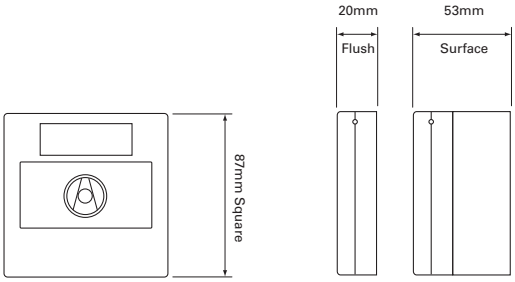

Catalogue Numbers

Reference	Cat No	Description
CXK/2/Y/BB	4942110FUL-0036	Keyswitch 2-Way, Yellow (including back box)
CXK/2/R/BB/4T	4942010FUL-0047	Keyswitch 2-Way, Red (including back box)


TECHNOGYM



Familiar and recognisable notification tones

Bells are the oldest of alarm warnings and are still the fire signal of choice in many markets. Although not providing the flexibility of electronic sounders, bells produce a unique sound that is quite distinctive and unlikely to be confused with any other alarm. Available in two styles, two colours and variable voltage, they are a cost effective and reliable solution.

42 FB Bell

43 CF Bell





Bells

FB Bell



A unique, patented alarm bell designed for use in fire, security and other signalling systems. The combination of a miniature solenoid with an integrated control circuit allows excellent sound coverage, minimum current consumption and increased reliability. The improved aesthetics make the bell suitable for all applications including the most prestigious locations.

Features

- Modern design
- Simple instalation
- Weatherproof kit option
- High sound output

Benefits

- Suitable for all locations
- Easy to fit
- Provides protection up to IP33C
- Delivers up to 95dB(A)

Technical Specification

Voltage	24Vdc
Current	24 Vdc 25 - 35mA
Sound Output	95dB(A)
Monitoring	Reverse polarity (dc only)
Temperature	-10°C to +55°C (Indoor) -25°C to +70°C (Outdoor)
Protection	IP21C, IP33C (WP)
Construction	Gong - Steel, Base - Polycarbonate
Weight	24 Volt 1.1Kg
Colours	Gong - Red and Grey Base - Black

Dimensions

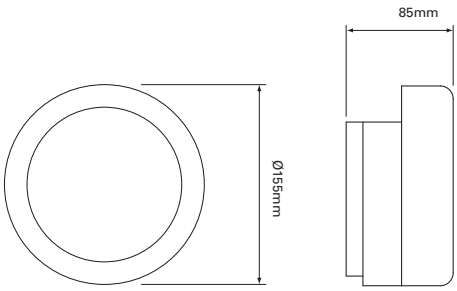

FB Bell Grey



Catalogue Numbers

Reference	Cat No	Description
FB/12/RED	500001FULL-0001	Electronic Solenoid Bell 12 Volts DC, Red
FB/024/R	502001FULL-2001	Electronic Solenoid Bell 24 Volts DC, Red



As well as Fire, Bells still remain a popular choice for many applications such as schools where they can sometimes be used as a signal for class change. All CF bells incorporate highly efficient rotary centrifugal movements combining high sound output with low current consumption.

Features

- High sound output
- Classic design
- Simple installation
- For fire or non fire use

Benefits

- Delivers up to 95dB(A)
- Easily recognisable sound for instant recognition
- Easy to install with a multifixing baseplace
- Flexible usage

Technical Specification

Voltage	20-28Vdc
Current	25mA (typical) @ 24V
Sound Output	95dB(A) 24V
Monitoring	Reverse polarity
Temperature	- 10°C to + 55°C
Protection	IP21C
Construction	Gong - Steel, Base - Polycarbonate
Weight	0.85Kg
Colours	Gong - Red Base - Black

Dimensions

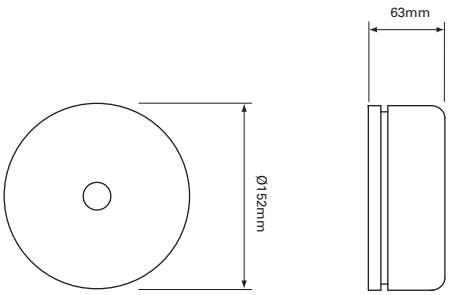

Catalogue Numbers

Reference	Cat No	Description
CFB6D12RED	521301FULL-1301	6 Inch Motorised Bell 12Vdc, Red (Centrifugal *)
CFB6D24RED	521601FULL-1601	6 Inch Motorised Bell 24Vdc, Red (Centrifugal *)



Simple, effective indication

Remote indicators provide local feedback to building occupants that an action is required. The range has various options, including visual, audible, and colour indication options, offering flexibility and helping to get the right message across without unduly alarming or creating a disturbance where noise levels are a key consideration.

46 LED & LED Buzzer



47 Optical and Optical-acoustic repeaters

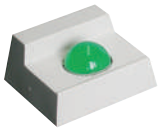

Indicators LED & LED Buzzer

LED & LED Buzzer



The versatility of this compact unit allows it to be used with the majority of detectors to provide convenient remote indication.

Available as a simple high brightness LED or with an integral buzzer, this indicator has many uses in applications where aesthetics is a key consideration.

Features

- Slim-line design
- Wide operating voltage
- Low current
- Integral buzzer option

Benefits

- Unobtrusive, blends in with modern building design
- Suitable for a wide range of applications
- Maximises the number of units in a circuit
- Ideal when both and audible and visual indicator is required

Technical Specification

Voltage	3 - 20Vdc 5 - 30Vdc (user selectable)
Current	6mA 15mA (AV version)
Resistor	0 / 1k5 / 3k6 (user selectable)
Temperature	- 20°C to + 60°C
Protection	IP23
Construction	ABS
Weight	0.08Kg LED 0.1Kg LED Buzzer
Colour	White
Lens Colour	Red

Dimensions

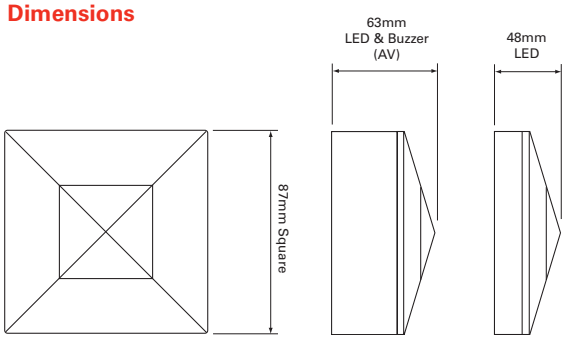

Catalogue Numbers

Reference	Cat No	Description
LED	600111FUL-0000	Remote Indicator, Red Lens
LED + Buzzer	600112FUL-0000	Remote Indicator with Integral Buzzer, Red Lens



High visibility LED's are ideal for notification purposes. The compact size and low current draw of the optical and optical acoustic repeaters makes them ideal for the signalling of alarms and anomalies. They are commonly installed in joint use with a detection unit in false ceilings and floating floors.

Available with a wide variety of LED colour variants and with an internal buzzer option, the optical repeaters offer clear visual indication suitable for a range of applications.

Features

- Compact size
- High visibility red, green and yellow LED
- Power supply at 12 and 24 Vcc
- Optical-acoustic versions (with Buzzer)

Benefits

- Quick, simple installation
- Visual and audible notification
- Discreet design
- Wide light diffusion
- Simple bi-adhesive fixing

Dimensions

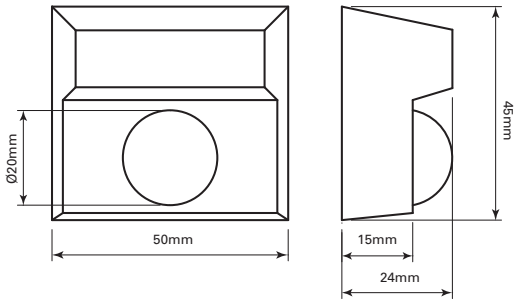

Technical Specification

Housing material	White coloured thermoplastic
Connection type	Terminals
Buzzer characteristics	75 dB at 30 cm continuous or pulsating sound 2300 Hz, 0.5s On - 0.5s Off
Operating Temperature	-20°C to +60°C
Protection degree	IP40
Standard equipment	Double-sided tape for fixing
Packaging	2 pc. / package

Catalogue Numbers

Cat No	Description
O-1490-R	OPT.-ACOUST. LED INDIC. RED FIXED
O-1490-V	OPT.-ACOUST. LED INDIC. GREEN FIXED
O-1490-G	OPT.-ACOUST. LED INDIC. YELLOW FIXED
O-1490-CR	OPTICAL-ACOUST. LED INDIC. RED
O-1490-CV	OPT.-ACOUST. LED GREEN FIXED/FLASH
O-1490-CG	OPT.-ACOUST. LED YELLOW FIXED/FLASH
O-1490-BZR	OPT.-ACOUST. LED RED FIXED/FLASH BUZZ
O-1490-BZV	OPT.-ACOUST. LED GREEN FIXED/FLASH BUZZ
O-1490-BZG	OPT.-ACOUST. LED YELLOW FIXED/FLASH BUZZ


WALES RALLY GB

Flexible power and installation configurations

A selection of bases and power supply units for the Fulleon fire notification range. The base range is designed to fit with the Rolp, Solista, Flashni and Solex product family.

Designed to offer flexibility and scalability for any size of installation the power supply units can be used to help drive the door release and sign boards range.

50 Bases



51 Switching Power Supply



52 Metal Box Power Supply



Bases & Power Supplies

Bases



The bayonet base has been designed to allow a common mounting for the Fulleon conventional alarm product range. The shallow base is suited to concealed wiring allowing installation with minimum visual impact. The deep and "U" bases cater for surface wiring of all types and provides ingress protection up to IP65.

The addition of 2 new low-profile base variants provide further options for installation in corners, or where the use of grommets or gaskets is preferred.

Features

- Design registered bayonet base
- Locking facility on all versions
- Protection up to IP65 on deep and U base
- Concealed wiring

Benefits

- Allows a common mounting for Fulleon's conventional alarm products
- Robust design
- External use in areas of high humidity
- Allowing installation with minimum impact

Dimensions

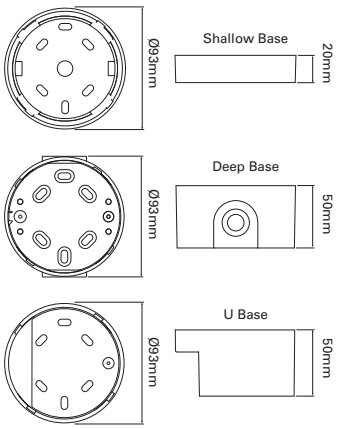

Technical Specification

Format	Circular bases with bayonet style detents
Lock	Screw
Compatibility Sounders	RoLP
Compatibility Beacons	Solex, Solista
Compatibility Sounder / Beacons	Flashni, RoLP Solista
Protection	IP54 (s)* IP65 (d)* (Product dependent)
Weight	0.1Kg (s)* 0.2Kg (d)*
Material	ABS
Colour	Red or white
Cable Entries Shallow	Single rear entry - 10mm Ø Side knockouts for surface laid cable up to 6mm Ø
Cable Entries Deep	Knockouts for 2 x 20mm Ø entries at 180°. Single 20mm entry may be drilled at rear
Cable Entries 'U'	For 2 adjacent 20mm entries Single 20mm entry may be drilled at rear

(s)* Shallow Base
(d)* Deep / U Base

Available Q3 2014
Contact customer service for details.

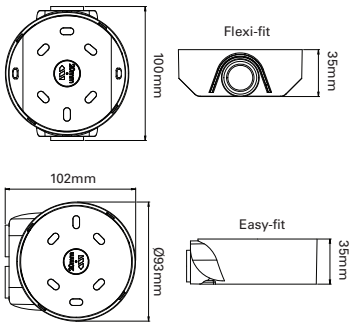

Catalogue Numbers

Reference	Cat No	Description
Shallow Base Red	593005FULL-0027	Shallow Red Base + Locking Screw
Deep Base Red	593001FULL-0022	Deep Red Base + Locking Screw
U Base Red	590020FULL-0094	U Red Base + Locking Screw
Shallow Base White	593006FULL-0094	Shallow White Base + Locking Screw
Deep Base White	593002FULL-0017	Deep White Base + Locking Screw
U Base White	590021FULL-0099	U White Base + Locking Screw



Specifically recommended as an auxiliary power supply unit for fire detection system components such as door retainers and notification devices, the highly efficient switching power supply has minimal heat loss.

The unit also provides excellent user feedback with 4 LED's that clearly indicate power supply status.

The switching power supply unit eliminates problems encountered with long cable runs. It also comes complete with a locking mechanism.

Features

- Switching technology
- High efficiency
- Small & large versions of metallic casing available
- Pb Battery Charging
- Available output current: 1,5 A, 2,5 A, 5A
- CPD Certified

Benefits

- Simple installation
- Increases power management options with larger installations

Technical Specification

Housing material	Epoxy varnished sheet
Connection type	Terminals
Power supply	230 Vca -15+10%, 50÷60 Hz
Lines	Input mains, output battery, output load, open collector output for remote indications, general alarm outputs through clean relay contacts. Door opening detection.
Electrical protection	Fuses for mains and battery overload, Short circuit in output, battery inversion. Door opening tamper.
Operating Temperature	+5°C÷+40°C
Insulation Class	Class I
IP Degree	IP30
Standard equipment	Two keys per lock
Packaging	1 pc. / package

Dimensions

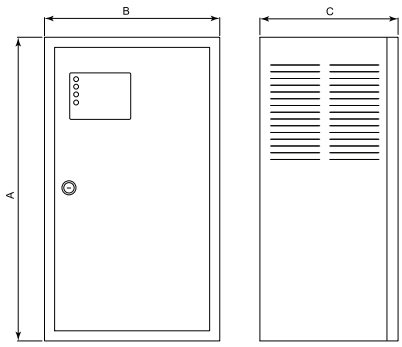

	A (mm)	B (mm)	C (mm)
Box A	290	250	180
Box B	450	260	205

Catalogue Numbers

Cat No	Description
82415BP	Switching Power Supply 1.5A Case A
82415BG	Switching Power Supply 1.5A Case B
82425BG	Switching Power Supply 2.5A Case B
82450BG	Switching Power Supply 2.5A Case B

Bases & Power Supplies

Metal Box Power Supply



The highly efficient metal box power supply is available with variout output currents and is protected from overloads, polarity reversals and short circuits.

Recommended for systems that require small to medium size power supply units, the metal box power supply is ideal for use with panels, door retainers and fire notification devices.

Features

- Switching technology
- Reduced size
- High efficiency
- Recharge for Pb batteries
- Available output current: 1,5 A, 2,5 A, 5A

Benefits

- Eliminates problems associated with long power cable runs
- Robust and purpose built
- Very high quality enclosure

Dimensions

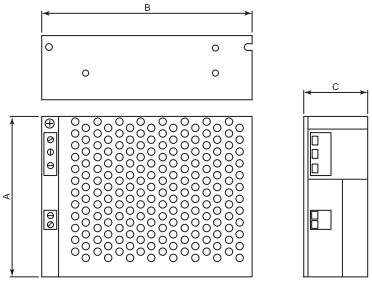

	A (mm)	B (mm)	C (mm)
82415-CSA	98	135	40
82425-CSA	98	165	42
82450-CSA	110	205	50

Technical Specification

Housing material	Galvanised steel sheet
Connection type	Terminals
Power supply	230 Vca -15+10%, 50÷60 Hz
Lines	Mains input, battery output, load output
Electrical protection	Fuses for mains, overload, over voltage in output, short circuit in output
Operating Temperature	+5°C÷+40°C
Insulation Class	Class I
Packaging	1 pc. / package

Catalogue Numbers

Cat No	Description
82415-CSA	Metal Box Power Supply 1.5A
82425-CSA	Metal Box Power Supply 2.5A
82450-CSA	Metal Box Power Supply 5A




the guardian

Maintaining the dynamic flow of personnel and protecting property

Vital to the safe operation of premises, there are many building thoroughfares fitted with fire doors that could cause inconvenience to the passage of people or goods. Magnetic door retainers provide a simple answer by keeping the doors open until a fire alarm (or other signal) causes the doors to close.

The Door Release range from Eaton provides a variety of options with different holding forces and mounting configurations to suit all types of doors found in commercial, education and healthcare premises.

56 Series 13000



57 Series 1330/1340



58 Series 1350/1360



59 Series 1369



60 Series 1370/1380



61 Accessories



Door Retainers

Series 13000



The Series 13000 is an electromagnetically operated fire door retainer approved to EN1155. It is designed to suit the needs of commercial fire doors, having a holding force of 50kg/490N and low current consumption. The Series 13000 is available with a floor mounting accessory.

Features

- Wall and floor mounting (with accessory)
- High holding force
- Low current consumption
- Release button and protection circuit
- Adjustable damping keeper plate
- Anti-residual release pin

Benefits

- Flexibility in mounting positions
- Suitable for large and small fire doors
- Requires less power from your system
- Door can be manually closed when not activated by the fire system
- Allows for door misalignment
- Efficient operation of your door retainer

Technical Specification

Holding Force	50Kg / 490N
Voltage	24Vdc
Current	45mA
Mounting	Wall mounting / Floor bracket available
Housing Material	ABS
Temperature Range	10°C to +55°C
Protection	IP40
Weight	560g
Body Colour	White or Black

Series 13000 Black



Dimensions

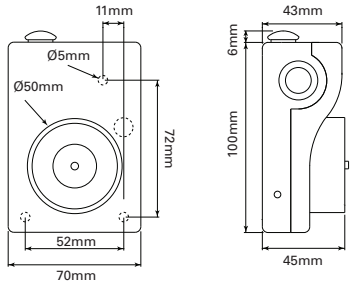

Catalogue Numbers

Cat No	Description
13050-BSP	Door Retainer, 50Kg, White with door status indication
13050-CSA	Door Retainer, 50Kg, Black
13050-SP	Door Retainer, 50Kg, Black with door status indication



The compact and modern 1330/1340 range of electromagnetic fire door retainers is approved to EN1155.

A flexible solution for for the needs of most commercial fire applications, the range has a holding force of up to 100kg / 980N and uses minimal current. The range is fitted with a dual diode for protections against disturbance and polarity reversal.

Features

- Compact design
- High holding force
- Low current consumption
- Release button and protection circuit
- Adjustable damping keeper plate

Benefits

- Discreet installation
- Suitable for large and small fire doors
- Requires less power from your system
- Door can be manually closed when not activated by the fire system
- Allows for door misalignment

Technical Specification

Holding Force	50Kg 490N / 100Kg 960 N
Voltage	24Vdc
Current	45mA / 100mA
Mounting	Wall mounting / Floor bracket available
Housing Material	Steel
Temperature Range	10°C to +55°C
Protection	IP40
Weight	540g / 810g
Body Colour	Steel / Black

Dimensions

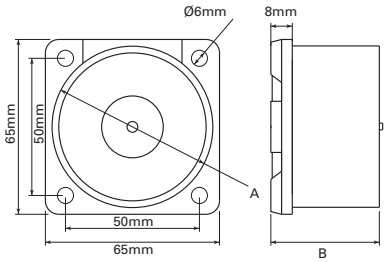

Catalogue Numbers

Cat No	Description
1335-CSA	Door Retainer, 50Kg, Steel body, Black, Terminals
1345-CSA	Door Retainer, 100Kg, Steel body, Black, Terminals

Door Retainers

Series 1350 / 1360



The 1350/1360 series is a range wall mounted electromagnetic door retainers that offers the user a choice of holding strengths.

Robust and simple to install, they are ideal for a wide range of applications such as nursing homes, hospitals, schools and industrial premises. Doors can be held open under normal conditions and then automatically released in the event of a fire alarm activation.

Features

- Versatile holding settings
- High holding force
- Low current consumption
- Release button and protection circuit
- Adjustable damping keeper plate
- Protection diodes as standard

Benefits

- Flexibility in installation
- Suitable for large and small fire doors
- Requires less power from your system
- Door can be manually closed when not activated by the fire system
- Allows for door misalignment

Technical Specification

Holding Force	25-50Kg 245-490N /50-100Kg 490-960N
Voltage	24Vdc
Current	25-45mA / 40-100mA
Mounting	Wall mounting / Floor bracket available
Housing Material	Steel / ABS cover
Temperature Range	10°C to +55°C
Protection	IP40
Weight	800g / 1000g
Body Colour	White / Black

Dimensions

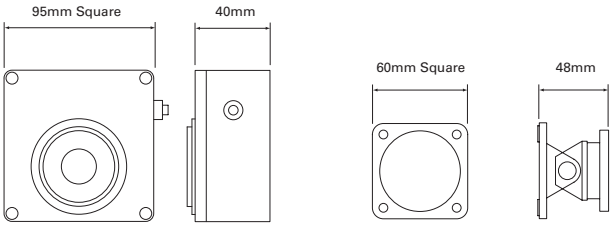

Catalogue Numbers

Reference	Cat No	Description
FSMD/024/40/W/DIODE	1350-CSA	Wall Mounted Magnetic Door Release 24Vdc, 40Kgf/390N (includes diode protection circuit)



Where wall mounted retainers are impractical a floor mount version can offer an alternative. The rugged cast frame of the 1369 series makes it immune to wear from everyday use in high traffic areas such as hospitals and nursing homes.
A manual release button is incorporated into the design and a spring ejector ensures that the door is promptly released.

Features

- Floor mounting
- High holding force
- Release button and protection circuit
- CPD certificate
- Protection diodes as standard

Benefits

- Flexibility in installation
- Suitable for large and small fire doors
- Door can be manually closed when not activated by the fire system
- Approved for Fire use

Technical Specification

Holding Force	50Kg 490N
Voltage	24Vdc
Current	45mA
Mounting	Wall mounting / Floor bracket available
Housing Material	ABS / Steel
Temperature Range	10°C to +55°C
Protection	IP40
Weight	950Kg
Body Colour	Black

Dimensions

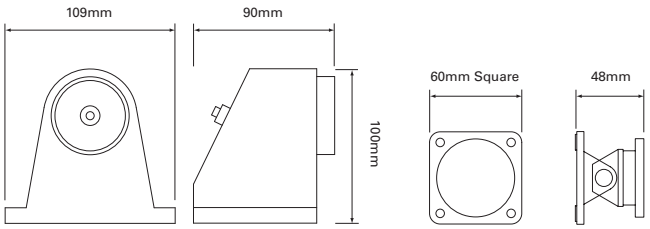

Catalogue Numbers

Reference	Cat No	Description
FSMD/024/50/FL	1369-CSA	Floor mounted Magnet 24Vdc, 50Kgf/490N

Door Retainers

Series 1370 / 1380



The 1370 and 1380 range of door retainers is an extremely flexible solution to help meet all of your greatest installation challenges.

Floor, wall or ceiling mounted variants ensures that the series is versatile, discreet and simple to install.

Features

- Floor, wall or ceiling mounting
- High holding force
- Release button and protection circuit
- Adjustable mounting height within 30 mm
- Protection diodes as standard

Benefits

- Flexibility in mounting positions
- Suitable for large and small fire doors
- Door can be manually closed when not activated by the fire system
- Versatile installation

Technical Specification

Holding Force	50Kg 490N / 100Kg 980N
Voltage	24Vdc
Current	45mA / 100mA
Mounting	Wall mounting / Floor bracket available
Housing Material	ABS / Aluminium
Temperature Range	10°C to +55°C
Protection	IP40
Weight	1200gr / 1680gr
Body Colour	Black

Dimensions

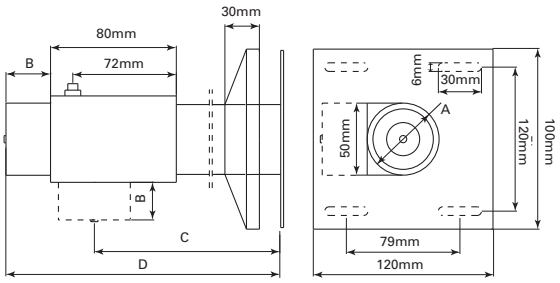

	Diameter A (mm)	Height B (mm)	Height C (mm)	Height D (mm)
1370-15-D	50	28	127-210	180-210
1370-30-D	50	28	277-307	330-360
1380-15-D	60	32.5	127-157	185-215
1380-30-D	60	32.5	277-307	335-367

Catalogue Numbers

Cat No	Description
1370-15-D	DOOR RELEASE WITH BRACKET 50KG 15CM
1370-30-D	DOOR RELEASE WITH BRACKET 50KG 30CM
1380-15-D	DOOR RELEASE WITH BRACKET 100KG 15CM
1380-30-D	DOOR RELEASE WITH BRACKET 100KG 30CM

Flexible keeper plate 120°

- With shock absorber
- Steel plate
- Black thermoplastic structure



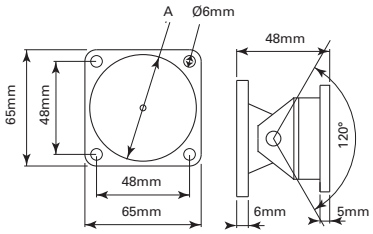

	A (mm)
1341-CSA	45
1351-CSA	55
1361-CSA	60

Flexible keeper plate 30°

- Reduced size
- Provided with shock absorber
- Steel plate
- Black thermoplastic structure

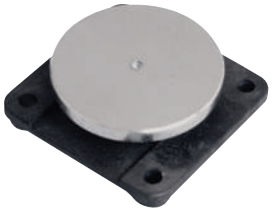

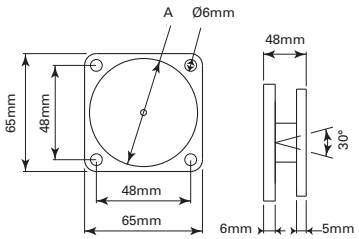

	A (mm)
1343-CSA	45
1353-CSA	55
1363-CSA	60

Bracket for floor or wall mounting

- Steel sheet structure
- White epoxy



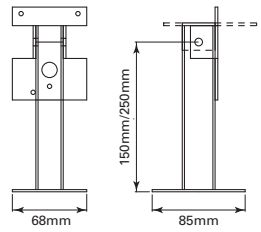

Catalogue Numbers

	Cat No	Description	Compatible Series	Weight
	1341-CSA	120° Angle keeper plate Ø45mm white	13100	130gr
	1343-CSA	30° Angle keeper plate Ø45mm white	13100	110gr
	1351-CSA	120° Angle keeper plate Ø55mm black	All up to 50Kg / 480N	170gr
	1353-CSA	30° Angle keeper plate Ø55mm black	All up to 50Kg / 480N	150gr
	1361-CSA	120° Angle keeper plate Ø60mm black	All 100Kg / 980N	210gr
	1363-CSA	30° Angle keeper plate Ø60mm black	All 100Kg / 980N	190gr
	13ST15	150mm bracket for wall / floor mounting	13000, 13100	500gr
	13ST25	250mm bracket for wall / floor mounting	13000, 13100	650gr



A clear indication to the status of an Emergency

In some markets the assurance of a sign board offers an additional level of protection to the building occupants.

A number of predefined messages are available. On request, other messages in any language to suit your market requirement are available. The sign boards can be illuminated, or with a buzzer, with the 5900 series complying with both EN 54-23 and EN 54-3.

64 Series 5000 - Thermoplastic



65 Series 5500



66 Series 5900



Signboards

Series 5000 - Thermoplastic



Providing Visual and Audible signalling, the 1500 series of sign boards is suitable for a diverse range of applications including fire, flooding and gas.

The LED technology provides high performance and energy efficiency ideal for industrial and commercial installations.

Various message options are available on page 67.

Features

- Unobtrusive aspect
- Wall mounting
- Visual and audible signalling
- Steady or blinking light

Benefits

- Wide range of applications
- Slim design
- Low consumption LEDs
- International pictograms

Technical Specification

Housing material	White coloured thermo-plastic self extinguishing (hot wire 850°C)
Screen material	Self-extinguishing transparent polycarbonate
Connection type	Terminals
Operating temperature	10°C to +50°C (+5°C to +50°C when self-powered)
Protection degree	IP40
Buzzer Characteristics	Buzzer sound pressure: at 1m 100dB @ 12V - 108dB @24V Frequency 3200 Hz Pulsating sound: 0.25 s ON - 0.25 s OFF
Packaging	1 pc / package

Dimensions

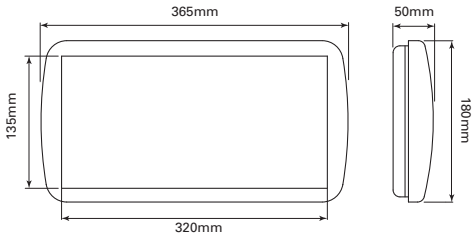

Catalogue Numbers

	Cat No	Description
Signboard	O-5055-CSA	Indoor LED Sign Board
Message	CSA08668	English 'Fire Alarm'



IP65 rated, the Series 5500 is suitable for outdoor use. Providing clear visual and audible signalling the series is suitable for notification purposes including fire, flooding and gas.

The LED technology ensures high performance and clear message identification. The robust and reliable plastic housing is rated IP65, making it suitable for outdoor use and industrial environments.

Various message options are available on page 67.

Features

- Thermoplastic self-extinguishing frame
- Protection grade IP 65
- Power supply 12/24 Vcc
- Steady or flashing light
- High sound power buzzer
- Self-powered versions are available (with batteries)

Benefits

- Robust housing
- Wide range of applications
- Slim design
- Low consumption LEDs
- International pictograms

Technical Specification

Housing material	White coloured thermo-plastic self-extinguishing (hot wire 850°C)
Screen material	Self-extinguishing transparent polycarbonate
Connection type	Terminals
Operating temperature	10°C to +50°C (+5°C to +50°C when self-powered)
Protection degree	IP65
Buzzer Characteristics	Buzzer sound pressure: at 1m 100dB @ 12V - 108dB @24V Frequency 3200 Hz Pulsating sound: 0.25 s ON - 0.25 s OFF
Packaging	1 pc / package

Dimensions

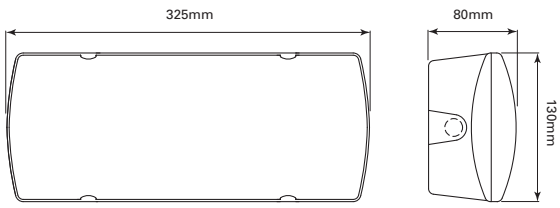

Catalogue Numbers

	Cat No	Description
Signboard	O-5555-CSA	Waterproof LED Sign Board
Message	CSA08668W	English 'Fire Alarm'

Signboards
Series 5900



The 5900 series signboard is IP54 rated, making it suitable for use both indoors and outdoors, even in damp and dusty environments.

With LED technology and an impressive 88dB internal sounder, the Series 5900 is a robust, reliable and high performing signboard for use in virtually any setting where clear and concise notification is needed.

The signboard is available as either a visual, audible or combined visual/audible solution. The visual indication provided by the 5900 series is EN54-23 certified.

Features

- Self-extinguishing thermoplastic structure
- IP54 Protection Degree
- High power acoustical output
- CPR certified

Benefits

- CPR certification EN54-3 and EN54-23
- Wide range of applications
- Slim design
- Low consumption LEDs
- International pictograms

Technical Specification

Housing material	Self-extinguishing thermoplastic
Connection type	Terminals
Operating temperature	-10°C to +50°C
Protection degree	IP54
Acoustical Specifications	Sound output 88dB(A) @ 1m Sound frequency: 2160 Hz +/- 30 Hz
Packaging	1 pc / package

Dimensions

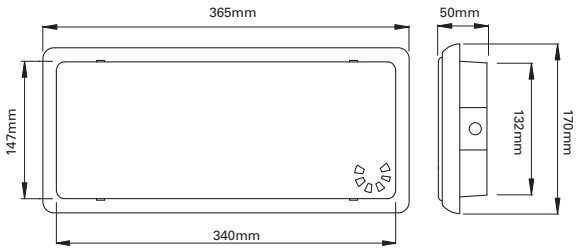

Catalogue Numbers

Reference	Cat No	Description
SIGN BOARD	5945-CSA	EN54-23 VISUAL ALARM DEVICE SIGN BOARD
SIGN BOARD	5955-CSA	EN54-3 ACOUSTIC ALARM DEVICE SIGN BOARD
SIGN BOARD	5965-CSA	EN54-23 EN54-3 VIS-ACOUSTIC ALARM DEVICE SIGN BOARD
Message	CSA08584	English 'Fire Alarm'

Available messages for the Series 5000. Messages are also available individually.



French	ALLARME INCENDIE	EVACUATION IMMEDIATE	ENTREE INTERDITE			
	CSA08670	CSA08671	CSA08672			
English	HAZARDOUS AREA	EXTINGUISHING IN PROGRESS	ALARM	FIRE ALARM	DO NOT ENTER	DOOR CLOSING
	CSA08665	CSA08666	CSA08667	CSA08668	CSA08669	CSA0866A
German	EINTRITT VERBOTEN	FEUERALARM	TIEFGARAGE SOFORT VERLASSEN	BETRETEN VERBOTEN GASALARM		
	CSA08673	CSA08674	CSA08675	CSA08676		

Available messages for the Series 5500. Messages are also available individually.



French	EVACUATION IMMEDIATE	ENTREE INTERDITE	
	CSA08671W	CSA08672W	
English	ALARM	FIRE ALARM	PLEASE EVACUATE
	CSA08667W	CSA08668W	CSA08691W

Available English language messages for the Series 5900. Messages are also available individually.



Accessories	FIRE ALARM	EVACUATE PREMISES	EXTINGUISHING IN PROGRESS
	CSA08584	CSA08587	CSA08589



Providing a truly global solution for all your signalling and notification challenges

A range of UL and FM approved Wheelock products designed for the North American market. Providing energy efficient, intelligible notification solutions.

A variety of audible and visual notification devices are available, including the new Exceder LED range of notification appliances. Wheelock products offer industry-leading, patented technology for a large range of audible and visual notification appliances.

All Wheelock products carry UL and FM approval.

70 MB Motorised Bell



71 Exceder Horns



72 Exceder Strobes



73 Exceder LED Horns



74 Exceder LED Strobes



75 Exceder Horn Strobes



76 DSM Sync Module



77 Pull Station



UL & FM Approved

MB Motorised Bell



A rugged 6" motorised bell with fixings to suit standard US wiring accessories. It may be used in exterior applications when fitted to a WBB weather resistant back box.

Features

- UL/FM approvals
- 6" or 10" gong
- Semi flush or surface mounting
- Motorised operation

Benefits

- Can be used in all territories recognising UL standards
- Gong sizes provide different frequencies that stand out from ambient noise
- Flexible installation options using standard US wiring boxes or Wheelock's own surface back boxes
- Efficient reliable operation

Technical Specification

Voltage	16 - 33Vdc
Current	30mA
Sound Output	92dB(A) @ 10ft
Monitoring	Reverse polarity
Temperature	0°C to + 49°C - 35°C to + 66°C (with WBB back box)
Protection	Interior use Exterior use with WBB backbox
Weight	0.83Kg (2 lbs)
Colour	Red or grey

Motorised Bell Grey



Dimensions

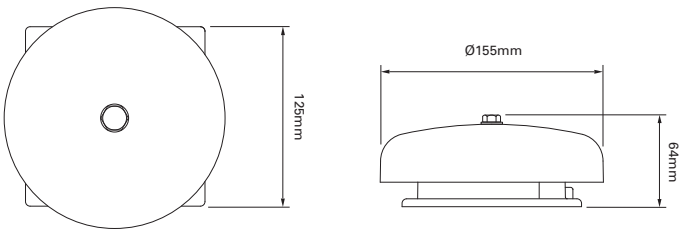

Catalogue Numbers

Reference	Cat No	Description
MB-G6-24-R	CN103941	MB Motor Bell, Red Body, 6in
MB-G6-24-S	CN104222	MB Motor Bell, Grey Body, 6in



The Wheelock® Exceder™ horns provide 3 sound settings of 90, 95, 99dB. Switch settings can be changed without the use of a tool and are located behind the appliance to prevent tampering. Wall models feature voltage test points for troubleshooting and AHJ inspection.

Features

- UL/FM approvals
- 90/95/99dB(A) Rating
- Ceiling or wall mount versions
- Fits standard US wiring accessories

Benefits

- Can be used in all territories recognising UL standards
- Output can be matched to the environment
- Aesthetics optimised for the mounting location
- Flexible installation options using standard US wiring boxes

Technical Specification

Voltage	12/24 VDC
Current	Reference Specification Sheet for current by model and dBA Setting
Sound Output	90, 95, 99dB
Temperature	0°C to +49°C
Protection	Internal use
Weight	0.25Kg
Colour	Red or White
Mounting	Wall or Ceiling
Backbox Mounting	1 gang, 2 gang, 4"sq., 3.5 octal

Dimensions

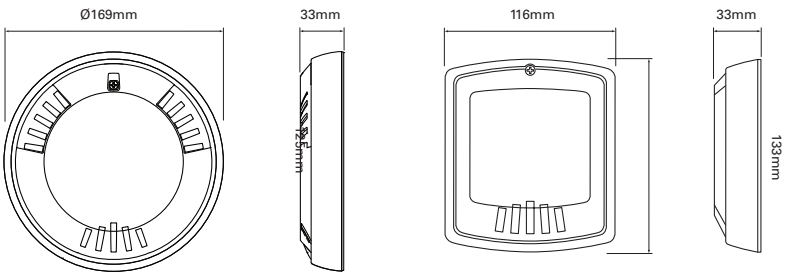

Exceder Horn Red - Wall



Catalogue Numbers

Reference	Cat No	Description
HNR	CN126292	Horn, Wall Mount, Red Body, 3 Tones, 12/24V
HNW	CN126356	Horn, Wall Mount, White Body, 3 Tones, 12/24V
HNRC	CN128967	Horn, Ceiling Mount, Red Body, 3 Tones, 12/24V
HNWC	CN128972	Horn, Ceiling Mount, White Body, 3 Tones, 12/24V

UL & FM Approved

Exceder Strobes



The Wheelock® Exceder™ strobes use high efficiency optics to minimise current draw to allow a greater number of appliances on the notification appliance circuit. All strobes feature an industry first of 8 candela settings on a single appliance. Switch settings, can be changed without the use of a tool and are located behind the appliance to prevent tampering. Wall models feature voltage test points for troubleshooting and AHJ inspection.

Features

- UL/FM Approvals
- Switchable candela rating up to 177cd
- Ceiling or Wall mount versions
- Fits standard US wiring accessories

Benefits

- Can be used in all territories recognising UL standards
- Output can be matched to room size and mounting location
- Aesthetics optimised for the mounting location
- Flexible installation options using standard US wiring boxes

Technical Specification

Voltage	12/24 VDC
Current	Reference Specification Sheet for current by model and dBA Setting
Flash Power	Selectable
(Wall models)	15/1575/30/75/95/110/135/185
(Ceiling Models)	15/30/60/75/95/115/150/177
Temperature	0°C to +49°C
Protection	Internal use
Weight	0.25Kg
Colour	Red or White
Mounting	Wall or Ceiling
Backbox Mounting	1 gang, 2 gang, 4"sq., 3.5 octal

Dimensions

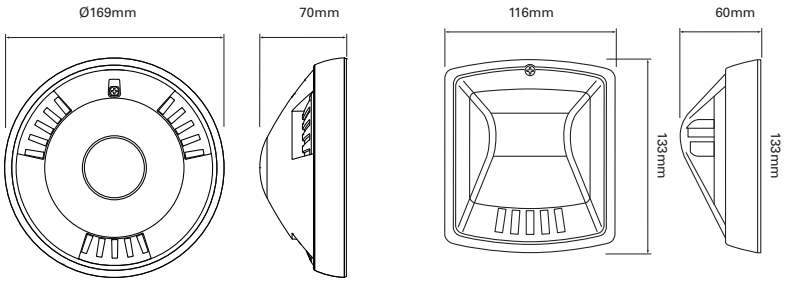

Exceder Strobe White - Ceiling



Catalogue Numbers

Reference	Cat No	Description
STR	CN127380	Strobe, Red, Wall mount, 8 Candela settings 12/24V
STW	CN127685	Strobe, White, Wall mount, 8 Candela settings 12/24V
STRC	CN127477	Strobe, Red, Ceiling mount, 8 Candela settings 12/24V
STWC	CN127488	Strobe, White, Ceiling mount, 8 Candela settings 12/24V



The Wheelock Exceder™ LED horn strobes feature one of the industry's smallest footprints along with a sleek, modern low-profile design.

In addition to energy savings, installers will benefit from a variety of features, including several candela settings, single-gang design, four convenient mounting options and the ability to change settings without a single tool - designed to reduce total cost of ownership.

Features

- UL/FM Approvals
- Energy efficient pataented LED technology
- Low profile design
- Fits standard US wiring accessories

Benefits

- Can be used in all territories recognising UL standards
- LED technology provides lowest current draw, reducing power supplies and installation cost
- Low profile design provides excellent neat aesthetics.
- Flexible installation options using standard US wiring boxes

Dimensions

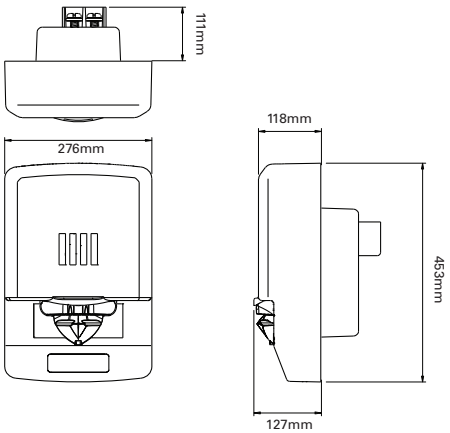

Technical Specification

Voltage	12/24 VDC
Current	Reference Specification Sheet for current by model and dBA Setting
Sound Output	90, 95, 99dB
Flash Power	Selectable
(Wall models)	15, 30, 75, 110cd
(Ceiling models)	15/30/60/75/95/115/150/177
Temperature	0°C to +49°C
Protection	Internal use
Weight	0.25Kg
Colour	Red or White
Mounting	Wall
Backbox Mounting	1 gang, Flush US box (4" x 2")

Catalogue Numbers

Reference	Cat No	Description
See website for more information		

UL & FM Approved

Exceder LED Strobes



The Wheelock® Exceder™ Series expands to include the industry's first LED notification appliances in one of the smallest, most compact single gang designs in the world. The patented technology provides the industry's lowest current draw. Ideal for Green Buildings, it incorporates a breakthrough optical design, resulting in best-in-class efficiency that provides material and system cost savings. Minimising current draw allows for a greater number of appliances on the NAC and fewer power supplies.

Features

- UL Approvals
- Wall mounting with switchable candela rating up to 110cd
- Energy efficient patented LED technology
- Fits standard US wiring accessories

Benefits

- Can be used in all territories recognising UL standards
- Output can be matched to room size
- LED technology provides the lowest current draw, reducing power supplies and installation cost
- Flexible installation options using standard US wiring boxes or Wheelock dedicated LED backbox

Technical Specification

Voltage	12/24 VDC
Current	Reference Specification Sheet for current by model and dBA Setting
Flash Power	Selectable
(Wall models)	15, 30, 75, 110cd
Temperature	0°C to +49°C
Protection	Internal use
Weight	0.25Kg
Colour	Red or White
Mounting	Wall
Backbox Mounting	1 gang, Flush US box (4" x 2")

Dimensions

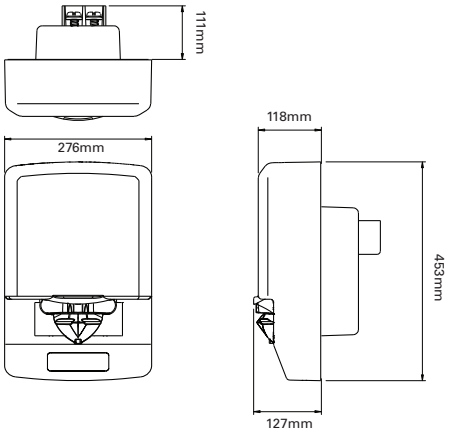

Catalogue Numbers

Reference	Cat No	Description
See website for more information		



The Wheelock® Exceder™ horn strobes incorporate high efficiency optics to minimise current draw to allow a greater number of appliances on the notification appliance circuit. All strobes feature an industry first of 8 candela settings on a single appliance and audables feature 3 sound settings of 90, 95, 99dB. Switch settings, can be changed without the use of a tool and are located behind the appliance to prevent tampering. Wall models feature voltage test points for troubleshooting and AHJ inspection.

Features

- UL/FM Approvals
- Switchable candela rating up to 177cd
- Switchable output up to 99dB(A)
- Ceiling or Wall mount versions

Benefits

- Can be used in all territories recognising UL standards
- Output can be matched to room size and mounting location
- Sound output can be adjusted for ambient conditions
- Aesthetics optimised for the mounting location

Technical Specification

Voltage	12/24 VDC
Current	Reference Specification Sheet for current by model and dBA Setting
Sound Output	90, 95, 99dB(A)
Flash Power	Selectable
(Wall models);	15/1575/30/75/95/110/135/185
(Ceiling Models)	15/30/60/75/95/115/150/177
Temperature	0°C to +49°C
Protection	Internal use
Weight	0.25Kg
Colour	Red or White
Mounting	Wall
Backbox Mounting	1 gang, 2 gang, 4" sq., 3.5 octal

Dimensions

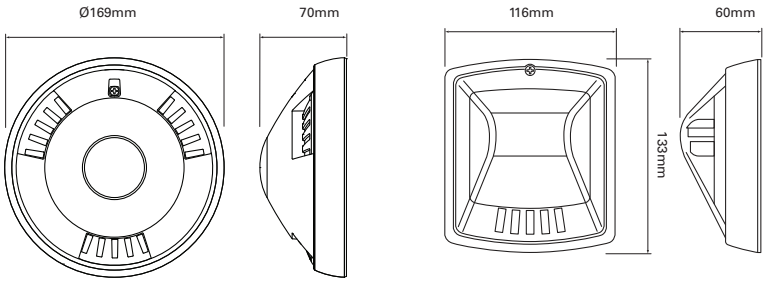

Exceder Horn Strobe Red - Wall



Catalogue Numbers

Reference	Cat No	Description
HSR	CN127249	Horn/strobe, Red, Wall mount, 3 Tones, 8 candela settings, 12/24V
HSW	CN127252	Horn/strobe, White, Wall mount, 3 Tones, 8 candela settings, 12/24V
HSRC	CN127459	Horn/strobe, Red, Ceiling mount, 3 Tones, 8 candela settings, 12/24V
HSWC	CN127464	Horn/strobe, White, Ceiling mount, 3 Tones, 8 candela settings, 12/24V

UL & FM Approved

DSM Sync Module



The DSM Sync Module provide the facility to synchronise the strobe flashes and the Code 3 temperoral evacuation tones produced by the notification appliances. It also allow the sounders to be silenced while maintaining synchronised strobe operation, using only a two core cable.

Features

- UL/FM approved
- Used with Exceder or AS Audible/Strobes
- Meets NFPA-72 requirements for temporal pattern
- 3A per Circuit

Benefits

- Can be used in all territories recognising UL standards
- Synchronises Aidle/Strobe operation to give unambiguous signals
- Meets NFPA guidance for the standard US Temporal alarm signal
- Capacity to operate many devices lowering installation costs

Technical Specification

Voltage	8 - 33Vdc
Current	3A per circuit (unit requires 40mA average)
Temperature	0°C to + 49°C
Protection	Internal use only
Weight	0.35Kg (0.75 lbs)
Colour	Red

Dimensions

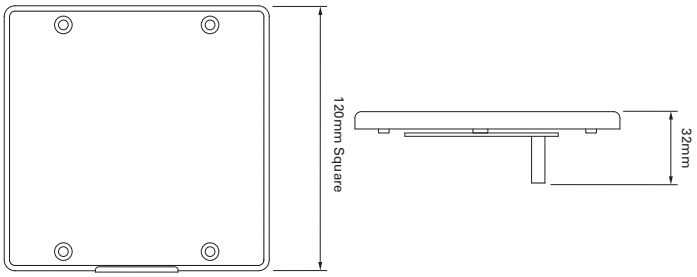

Catalogue Numbers

Reference	Cat No	Description
DSM-12/24-R	CN126374	DSM Sync module



Wheelock Series MPS non-coded Manual Pull Stations are constructed of high quality, die-cast metal for long lasting performance and may be mounted on a single gang (US style) backbox. Available in either single or dual action configurations for indoor or outdoor use with SPST contacts and terminal strip connections.

Features

- UL/FM approved
- Key reset
- Robust metal construction
- Fits standard single US box

Benefits

- Can be used in all territories recognising UL standards
- Prevents access by unauthorised persons
- Withstands use in busy public and commercial spaces
- Easy installation using Wheelock surface mounting boxes or flush standard US single gang accessories

Dimensions

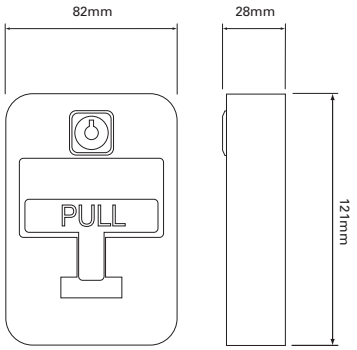

Technical Specification

Voltage	16 - 33Vdc
Current	Normally open contact will close when the pull station is activated and is rated for 30 Vdc @ 1 amp and/or 120 Vac @ 1 amp.
Mounting	Wall
Back box	Single gang (4" x 2")
Configurations	Single or dual action
Temperature	0°C to + 49°C
Protection	Internal or external with NPS-WP backbox
Weight	0.35Kg (0.75 lbs)
Colour	Red, die-cast metal
Left	Mounting
Right	Single gang flush US box (4" x 2") Surface boxes MPS-ISB or MPS-WP

Catalogue Numbers

Reference	Cat No	Description
MPS-100	CN108400	Manual Pull Station
MPS-400X	CN108403	Hazardous area Manual Pull Station
MPS-RODS	CN108406	MPS scored acrylic reods for MPS-100
MPS-WP	CN108405	Back box for MPS-100

Part Numbers

Product name	Page	Product reference	Cat No	Description
SOUNDERS				
RoLP	6	ROLP/SV/R/S	540501FULL-0389X	RoLP, Shallow Base, Red Body
		ROLP/SV/W/S	540502FULL-0406X	RoLP, Shallow Base, White Body
		ROLP/SV/R/D	540503FULL-0403X	RoLP, Deep Base, Red Body
		ROLP/SV/W/D	540504FULL-0410X	RoLP, Deep Base, White Body
		ROLP/SV/R/U	540505FULL-0390X	RoLP, U Base, Red Body
		ROLP/SV/W/U	540506FULL-0441X	RoLP, U Base, White Body
ROLP MAXI	7	ROLPX/SV/R/S	540527FULL-0396X	RoLP Maxi, Shallow Base, Red Body
		ROLPX/SV/R/D	540576FULL-0779X	RoLP Maxi ,Deep Base, Red Body
		ROLPX/SV/W/S	540577FULL-0786X	RoLP Maxi, Shallow Base, White Body
		ROLPX/SV/W/D	540578FULL-0781X	RoLP Maxi, Deep Base, White Body
CS200	7	CS200/SV/R/32	547013FULL-0772X	CS200, Red Body, 32 Tones
ASKARI COMPACT	9	AC/SV/R/S/BB	550068FULL-0142X	Askari Compact Sounder, Red, Surface(BB), Tone select switch, Volume control
		AC/SV/W/S/BB	550072FULL-0216X	Askari Compact Sounder, White, Surface(BB), Tone select switch, Volume control
SYMPHONI	10	SY/R	650001FULL-0003X	Symphoni Sounder, Red Body
		SY/W1	650002FULL-0004X	Symphoni Sounder, White Body
		SY/R/E	650008FULL-0073X	Symphoni Sounder, Red Body, European tone version
		SY/W1/E	650009FULL-0074X	Symphoni Sounder, White Body, European tone version
		SY/IP/W	654036FULL-0225X	Symphoni Sounder, White Body, IP66 (WP)
		SY/IP/R	654008FULL-0058X	Symphoni Sounder, Red Body, IP66 (WP)
SYMPHONI HO	11	SY/HO/R	651004FULL-0009X	Symphoni High Output Sounder, Red Body
		SY/HO/W	651003FULL-0008X	Symphoni High Output Sounder, White Body
		SYHO/R/IP	651012FULL-0057X	Symphoni High Output Sounder, Red Body, IP66 Version (WP)
		SYHO/GW/IP	650022FULL-1029X	Symphoni High Output Sounder, White Body, IP66 Version (WP)
SYMPHONI VOICE+	12	SYV/R/V+ VP001ASY	680003FULL-0003X	Symphoni Voice Plus Sounder, Red Body
		SYV/W/V+ VP001ASY	680004FULL-0004X	Symphoni Voice Plus Sounder, White Body
ASSERTA Maxi	14	AS/S/24/120/R	7011124FUL-0012X	Asserta Sounder, 24v, Red Body, 120dB
		AS/S/24/120/G	7092272FUL-0149	Asserta Sounder, 24v, Grey Body, 120dB
		AS/S/024/R/110	7011114FUL-0011X	Asserta Sounder, 24v, Red Body, 110dB
		AS/S/024/G/110	7011214FUL-0044X	Asserta Sounder, 24v, Grey Body, 110dB
		AS/S/115-230/R/110	7013114FUL-0013	Asserta Sounder, 115/230Vac, Red Body, 110dB
		AS/S/115-230/G/110	7092273FUL-0150	Asserta Sounder, 115/230Vac, Grey Body, 110dB
		AS/S/115-230/R/120	7013124FUL-0014	Asserta Sounder, 115/230Vac, Red Body, 120dB
		AS/S/115-230G/120	7092274FUL-0151	Asserta Sounder, 115/230Vac, Grey Body, 120dB
ASSERTA MIDI	15	AS/M/S/9-60V/R	7041134FUL-0020X	Asserta Midi Sounder, Red Body, 9 to 60Vdc
		AS/M/S/9-60/G	7041214FUL-0176X	Asserta Midi Sounder, Grey Body, 9 to 60Vdc
		AS/M/S/115/230/R	7042134FUL-0023X	Asserta Midi Sounder, Red Body, 115Vac/230Vac
		AS/M/S/115-230/G	7092267FUL-0144	Asserta Midi Sounder, Grey Body, 115Vac/230Vac
		AS/M/S/24VAC/R	7044134FUL-0022X	Asserta Sounder, 24Vdc, Red Body, 120dB
SQUASHNI G3	13	SQG3/SDR/W	666058FULL-0098X	Squashni G3 Sounder, White Body

Product name	Page	Product reference	Cat No	Description
BEACONS and SOUNDERS BEACONS				
SOLISTA LX WALL	18	SOL-LX-W/WF/R1/S	812007FULL-0108X	Solista LX Wall, White Flash, Red Shallow Base
		SOL-LX-W/WF/R1/D	812008FULL-0109X	Solista LX Wall, White Flash, Red Deep Base
		SOL-LX-W/WF/R1/U	812009FULL-0110X	Solista LX Wall, White Flash, Red U Base
		SOL-LX-W/WF/W1/S	812010FULL-0111X	Solista LX Wall. White Flash, White Shallow Base
		SOL-LX-W/WF/W1/D	812011FULL-0112X	Solista LX Wall, White Flash, White Deep Base
		SOL-LX-W/WF/W1/U	812012FULL-0113X	Solista LX Wall, White Flash, White U Base
		SOL-LX-W/RF/R1/S	812013FULL-0114X	Solista LX Wall, Red Flash, Red Shallow Base
		SOL-LX-W/RF/R1/D	812005FULL-0107X	Solista LX Wall, Red Flash, Red Deep Base
		SOL-LX-W/RF/R1/U	812014FULL-0115X	Solista LX Wall, Red Flash, Red U Base
		SOL-LX-W/RF/W1/S	812015FULL-0116X	Solista LX Wall, Red Flash, White Shallow Base
		SOL-LX-W/RF/W1/D	812016FULL-0117X	Solista LX Wall, Red Flash, White Deep Base
		SOL-LX-W/RF/W1/U	812017FULL-0118X	Solista LX Wall, Red Flash, White U Base
SOLISTA LX CEILING	19	SOL-LX-C/WF/W1/S	812020FULL-0121X	Solista LX Ceiling, White Flash, White Shallow Base
		SOL-LX-C/WF/W1/D	812021FULL-0122X	Solista LX Ceiling, White Flash, White Deep Base
		SOL-LX-C/RF/W1/S	812022FULL-0123X	Solista LX Ceiling, Red Flash, White Shallow Base
		SOL-LX-C/RF/W1/D	812023FULL-0124X	Solista LX Ceiling, Red Flash, White Deep Base
SOLISTA MAXI	20	SOLX/RF/CL/R/S	811041FULL-0006	Solista Maxi, Clear Lens, Red Flash, Red Shallow Base
		SOLX/RF/CL/W/S	811023FULL-0039	Solista Maxi, Clear Lens, Red Flash, White Shallow Base
		SOLX/RF/RL/W/D	811024FULL-0040	Solista Maxi, Red Lens, Red Flash, White Deep Base
		SOLX/RF/RL/R/S	811021FULL-0037	Solista Maxi, Red Lens, Red Flash, Red Shallow Base
		SOLX/RF/RL/R/D	811020FULL-0036	Solista Maxi, Red Lens, Red Flash, Red Deep Base
		SOLX/AF/CL/W/S	811026FULL-0043	Solista Maxi, Clear Lens, Red Flash, White Shallow Base
		SOLX/AF/CL/W/D	811027FULL-0044	Solista Maxi, Red Lens, Red Flash, White Deep Base
		SOLX/AF/CL/R/S	811042FULL-0007	Solista Maxi, Clear Lens, Amber Flash, Red Shallow Base
		SOLX/GF/CL/W/S	811029FULL-0046	Solista Maxi, Clear Lens, Green Flash, White Shallow Base
		SOLX/GF/CL/W/D	811030FULL-0047	Solista Maxi, Red Lens, Green Flash, White Deep Base
		SOLX/GF/CL/R/S	811043FULL-0008	Solista Maxi, Clear Lens, Green Flash, Red Deep Base
		SOLX/BF/CL/W/S	811035FULL-0052	Solista Maxi, Clear Lens, Blue Flash, White Shallow Base
		SOLX/BF/CL/W/D	811036FULL-0053	Solista Maxi, Clear Lens, Blue Flash, White Deep Base
		SOLX/BF/CL/R/S	811045FULL-0010	Solista Maxi, Clear Lens, Blue Flash, Red Shallow Base
		SOLX/AF/CL/R/D + MAINS MODULE	811057FULL-0082	Solista Maxi, Clear Lens, Amber Flash, Red Deep Base + Mains Module
SOLEX	21	SO/R/SR/3C	531025FULL-0061	Solex Xenon, Red Lens, Red Shallow Base, 3cd
		SO/R/DR/3C	531025FULL-0087	Solex Xenon, Red Lens, Red Deep Base, 3cd
		SO/R/UR/3C	531025FULL-0084	Solex Xenon, Red Lens, 'U' Red Base, 3C
		SO/R/NB/3C	531025FULL-1052	Solex Xenon, Red Lens, No Base, Red Base, 3C
		SO/A/SW/3C	531026FULL-0062	Solex Xenon, Amber Lens, White Shallow Base, 3cd
		SO/A/DW/3C	531026FULL-0086	Solex Xenon, Amber Lens, White Deep Base, 3cd
		SO/A/NB/3C	531026FULL-1053	Solex Xenon, Amber Lens, White No Base, 3C
		SO/C/SW/3C	531039FULL-0067	Solex Xenon, Clear Lens, White Shallow Base, 3C
		SO/C/DW/3C	531039FULL-0110	Solex Xenon, Clear Lens, Deep White Base, 3C
		SO/B/SW/3C	531040FULL-0068	Solex Xenon, Blue Lens, White Shallow Base, 3C
		SO/B/DW/3C	531040FULL-0089	Solex Xenon, Blue Lens, White Deep Base, 3C
		SO/G/SW/3C	531041FULL-0069	Solex Xenon, Green Lens, White Shallow Base, 3C
		SO/G/DW/3C	531041FULL-0092	Solex Xenon, Green Lens, White Deep Base, 3C

Part Numbers

Product name	Page	Product reference	Cat No	Description
BEACONS and SOUNDERS BEACONS (cont.)				
SOLEX 10	21	SO/R/SR/10C	531024FULL-0060	Solex Xenon, Red Lens, Red Shallow Base, 10Cd
		SO/R/DR/10C	531024FULL-0088	Solex Xenon, Red Lens, Red Deep Base, 10Cd
		SO/R/DR/10C	531924MED-1081	Solex Xenon, Red Lens, Red Deep Base, 10Cd
		SO/A/SW/10C	531027FULL-0063	Solex Xenon, Amber Lens, White Shallow Base, 10Cd
		SO/A/DW/10C	531027FULL-0085	Solex Xenon, Amber Lens, White Deep Base, 10Cd
		SO/R/SW/10C	531024FULL-0008	Solex Xenon, Red Lens, White Shallow Base, 10C
		SO/R/UR/10C	531024FULL-0083	Solex Xenon, Red Lens, Red U Base, 10C
		SO/G/DW/10C	531035FULL-0091	Solex Xenon, Green Lens, White Deep Base, 10C
		SO/A/UW/10C	531027FULL-0101	Solex Xenon, Amber Lens, White U Base, 10C
		SO/B/SW/10C	531034FULL-0071	Solex Xenon, Blue Lens, White Shallow Base, 10C
		SO/B/DW/10C	531034FULL-0090	Solex Xenon, Blue Lens, White Deep Base, 10C
		SO/G/SW/10C	531035FULL-0072	Solex Xenon, Green Lens, White Shallow Base, 10C
		SO/C/SW/10C	531042FULL-0070	Solex Xenon, Clear Lens, White Shallow Base, 10C
		SO/C/DW/10C	531042FULL-0093	Solex Xenon, Clear Lens, White Deep Base, 10C
		SO/C/UW/10C	531042FULL-0124	Solex Xenon, Clear Lens, White U Base, 10C
		SO/A/SW/10/AT	531044FULL-0077	Solex Xenon, Amber Lens, White Shallow Base, 10Cd Anti-tamper
		SO/R/SW/10/AT	531043FULL-0076	Solex Xenon, Red Lens, Red Shallow Base, 10Cd Anti-tamper
		SO/A/DW/10C + MAINS MOD	531027FULL-1048	Solex Xenon, Amber Lens, White Deep Base, 10C + Mains Module
		SO/R/DR/10C + MAINS MOD	531024FULL-1049	Solex Xenon, Red Lens, Red Deep Base, 10C + Mains Module
		SO/B/DW/10C + MAINS MOD	531051FULL-1051	Solex Xenon, Blue Lens, White Deep Base, Mains, 10C + Mains Module
SOLEX 15	21	SO/R/SR/15C	531028FULL-0064	Solex Xenon, Red Lens, Red Shallow Base, 15Cd
		SO/R/DR/15C	531028FULL-0111	Solex Xenon, Red Lens, Red Deep Base, 15Cd
		SO/R/UR/15C	531028FULL-0131	Solex Xenon, Red Lens, Red U Base, 15C
		SO/A/SW/15C	531029FULL-0065	Solex Xenon, Amber Lens, White Shallow Base, 15Cd
		SO/A/DW/15C	531029FULL-0112	Solex Xenon, Amber Lens, White Deep Base, 15Cd
		SO/C/SW/15C	531036FULL-0073	Solex Xenon, Clear Lens, White Shallow Base, 15C
		SO/C/DW/15C	531036FULL-0113	Solex Xenon, Clear Lens, White Deep Base, 15C
		SO/B/SW/15C	531037FULL-0074	Solex Xenon, Blue Lens, White Shallow Base, 15C
		SO/B/DW/15C	531037FULL-0114	Solex Xenon, Blue Lens, White Deep Base, 15C
		SO/B/UW/15C	531037FULL-0134	Solex Xenon, Blue Lens, White U Base, 15C
		SO/G/SW/15C	531038FULL-0075	Solex Xenon, Green Lens, White Shallow Base, 15C
		SO/G/DW/15C	531038FULL-0115	Solex Xenon, Green Lens, White Deep Base, 15C
LENS PACKS	NOT SHOWN	SO/LENS/R PK	5590200FULL-0300	Solex, Red Lens (Pack of 5)
		SO/LENS/A PK5	590201FULL-0301	Solex, Amber Lens (Pack of 5)
		SO/LENS/C PK5	590202FULL-0302	Solex, Clear Lens (Pack of 5)
		SO/LENS/B PK5	590203FULL-0303	Solex, Blue Lens (Pack of 5)
		SO/LENS/G PK5	590204FULL-0304	Solex, Green Lens (Pack of 5)
RoLP LX WALL	24	ROLP/W1/LX-W/WF	8500022FULL-0022X	RoLP LX Wall, White Flash, White Body
		ROLP/R1/LX-W/WF	8500023FULL-0023X	RoLP LX Wall, White Flash, Red Body
		ROLP/W1/LX-W/RF	8500024FULL-0024X	RoLP LX Wall, Red Flash, White Body
		ROLP/R1/LX-W/RF	8500025FULL-0025X	RoLP LX Wall, Red Flash, Red Body
RoLP MAXI LX WALL	24	ROLPX/W1/LX-W/WF	8500027FULL-0027X	RoLP Maxi LX Wall, White Flash, White Body
		ROLPX/R1/LX-W/WF	8500028FULL-0028X	RoLP Maxi LX Wall, White Flash, Red Body
		ROLPX/W1/LX-W/RF	8500029FULL-0029X	RoLP Maxi LX Wall, Red Flash, White Body
		ROLPX/R1/LX-W/RF	8500030FULL-0030X	RoLP Maxi LX Wall, Red Flash, Red Body

Product name	Page	Product reference	Cat No	Description
BEACONS and SOUNDERS BEACONS (cont.)				
RoLP LX WALL BASE	24	ROLP Base-LX-W/WF/W1	8500037FULL-0037X	RoLP LX Base, White Flash, White Body
		ROLP Base-LX-W/WF/R1	8500038FULL-0038X	RoLP LX Base, White Flash, Red Body
		ROLP Base-LX-W/RF/W1	8500039FULL-0039X	RoLP LX Base, Red Flash, White Body
		ROLP Base-LX-W/RF/R1	8500040FULL-0040X	RoLP LX Base, Red Flash, Red Body
SYMPHONI G1 LX WALL	25	SYG1/LX-W/WF/W1	8500042FULL-0042X	Symphoni LX Wall, White Flash, White Body
		SYG1/LX-W/WF/R1	8500043FULL-0043X	Symphoni LX Wall, White Flash, Red Body
		SYG1/LX-W/RF/W1	8500044FULL-0044X	Symphoni LX Wall, Red Flash, White Body
		SYG1/LX-W/RF/R1	8500045FULL-0045X	Symphoni LX Wall, Red Flash, Red Body
SYMPHONI G1 LX WALL WP	25	SYG1/LX-W/WF/W1/WP	8500047FULL-0047X	Symphoni WP LX Wall, White Flash, White Body
		SYG1/LX-W/WF/R1/WP	8500048FULL-0048X	Symphoni WP LX Wall, White Flash, Red Body
		SYG1/LX-W/RF/W1/WP	500049FULL-0049X	Symphoni WP LX Wall, Red Flash, White Body
		SYG1/LX-W/RF/R1/WP	8500050FULL-0050X	Symphoni WP LX Wall, Red Flash, Red Body
SYMPHONI G1 E LX WALL	25	SYG1/E/LX-W/WF/W1	8500052FULL-0052X	Symphoni LX Wall, White Flash, White Body, European Tone
		SYG1/E/LX-W/WF/R1	8500053FULL-0053X	Symphoni LX Wall, White Flash, Red Body, European Tone
		SYG1/E/LX-W/RF/W1	8500054FULL-0054X	Symphoni LX Wall, Red Flash, White Body, European Tone
		SYG1/E/LX-W/RF/R1	8500055FULL-0055X	Symphoni LX Wall, Red Flash, Red Body, European Tone
SYMPHONI G1 E LX WALL WP	25	SYG1/E/LX-W/WF/W1/WP	8500057FULL-0057X	Symphoni WP LX Wall, White Flash, White Body, European Tone
		SYG1/E/LX-W/WF/R1/WP	8500058FULL-0058X	Symphoni WP LX Wall, White Flash, Red Body, European Tone
		SYG1/E/LX-W/RF/W1/WP	8500059FULL-0059X	Symphoni WP LX Wall, Red Flash, White Body, European Tone
		SYG1/E/LX-W/RF/R1/WP	8500060FULL-0060X	Symphoni WP LX Wall, Red Flash, Red Body, European Tone
SYMPHONI HO LX WALL	25	SYHO/LX-W/WF/W1	8500072FULL-0072X	Symphoni HO LX Wall, White Flash, White Body
		SYHO/LX-W/WF/R1	8500073FULL-0073X	Symphoni HO LX Wall, White Flash, Red Body
		SYHO/LX-W/RF/W1	8500074FULL-0074X	Symphoni HO LX Wall, Red Flash, White Body
		SYHO/LX-W/RF/R1	8500075FULL-0075X	Symphoni HO LX Wall, Red Flash, Red Body
SYMPHONI HO LX WALL WP	25	SYHO/LX-W/WF/W1/WP	8500077FULL-0077X	Symphoni HO WP LX Wall, White Flash, White Body
		SYHO/LX-W/WF/R1/WP	8500078FULL-0078X	Symphoni HO WP LX Wall, White Flash, Red Body
		SYHO/LX-W/RF/W1/WP	8500079FULL-0079X	Symphoni HO WP LX Wall, Red Flash, White Body
		SYHO/LX-W/RF/R1/WP	8500080FULL-0080X	Symphoni HO WP LX Wall, Red Flash, Red Body
SYMPHONI VOICE+ LX WALL	25	SYV+/LX-W/WF/W1	Contact Customer Services	Symphoni Voice+ LX Wall, White Flash, White Body
		SYV+/LX-W/WF/R1	Contact Customer Services	Symphoni Voice+ LX Wall, White Flash, Red Body
		SYV+/LX-W/RF/W1	Contact Customer Services	Symphoni Voice+ LX Wall, Red Flash, White Body
		SYV+/LX-W/RF/R1	Contact Customer Services	Symphoni Voice+ LX Wall, Red Flash, Red Body
SYMPHONI VOICE+ LX WALL WP	25	SYV+/LX-W/WF/W1/WP	Contact Customer Services	Symphoni Voice+ WP LX Wall, White Flash, White Body
		SYV+/LX-W/WF/R1/WP	Contact Customer Services	Symphoni Voice+ WP LX Wall, White Flash, Red Body
		SYV+/LX-W/RF/W1/WP	Contact Customer Services	Symphoni Voice+ WP LX Wall, Red Flash, White Body
		SYV+/LX-W/RF/R1/WP	Contact Customer Services	Symphoni Voice+ WP LX Wall, Red Flash, Red Body
SYMPHONI BASE	25	SY Base-LX-W/WF/W1	8500092FULL-0092X	Symphoni LX Base, White Flash, White Body
		SY Base-LX-W/WF/R1	8500093FULL-0093X	Symphoni LX Base, White Flash, Red Body
		SY Base-LX-W/RF/W1	8500094FULL-0094X	Symphoni LX Base, Red Flash, White Body
		SY Base-LX-W/RF/R1	8500095FULL-0095X	Symphoni LX Base, Red Flash, Red Body
SYMPHONI BASE WP	25	SY Base-LX-W/WF/W1/WP	8500097FULL-0097X	Symphoni LX WP Base, White Flash, White Body
		SY Base-LX-W/WF/R1/WP	8500098FULL-0098X	Symphoni LX WP Base, White Flash, Red Body
		SY Base-LX-W/RF/W1/WP	8500099FULL-0099X	Symphoni LX WP Base, Red Flash, White Body
		SY Base-LX-W/RF/R1/WP	8500100FULL-0100X	Symphoni LX WP Base, Red Flash, Red Body

Part Numbers

Product name	Page	Product reference	Cat No	Description
BEACONS and SOUNDERS BEACONS (cont.)				
Squashni LX Base	26	SEE WEBSITE FOR MORE INFORMATION		Squashni G4 LX Ceiling
RoLP SOLISTA	29	ROLPSB/SV/RL/R/S	8210112FULL-0015X	RoLP Solista, Red LED Beacon, Red Lens, Red Shallow Base
		ROLPSB/SV/RL/R/D	8210113FULL-0016X	RoLP Solista, Red LED Beacon, Red Deep Base
		ROLPSB/SV/RL/W/S	8210114FULL-0017X	RoLP Solista, Red LED Beacon, Red Lens, White Shallow Base
		ROLPSB/SV/RL/W/D	8210115FULL-0018X	RoLP Solista, Red LED Beacon, Red Lens, White Deep Base
		ROLPSB/SV/RL/R/N	8210111FULL-0004X	RoLP Solista, Red LED Beacon, Red Lens, Red No Base
		ROLPSB/SV/AL/W/D	8210125FULL-0007X	RoLP Solista, Amber LED Beacon, Amber Lens, White Deep Base
RoLP MAXI SOLISTA	30	ROLPX/SV/SB/RL/R/S	8210119FULL-0001	RoLP Maxi Sounder Beacon, Red LED Beacon, Red Shallow Base
		ROLPX/SV/SB/RL/R/D	8210130FULL-0002	RoLP Maxi Sounder Beacon, Amber Lens, White Deep Base
		ROLPX/SV/SB/RL/R/U	8210121FULL-0003	RoLP Maxi Sounder Beacon, Red LED Beacon, Red Body, U Base
		See website for further part numbers and variants		
FLASHNI 24V	31	FL/SV/RL/R/S SWITCH	640025FULL-0061X	Flashni Sounder/Beacon, Red Lens, Red Shallow Base, Tone select switch
		FL/SV/RL/R/D SWITCH	640031FULL-0111X	Flashni Sounder/Beacon, Red Lens, Red Deep Base, Tone select switch.
		FL/AL/W/D SWITCH	640024FULL-0060X	Flashni Sounder/Beacon, Amber Lens, White Deep Base, Tone select switch
		FL/RL/W/D SEPARATE SWITCH	640451FULL-0208X	Flashni Sounder/Beacon, Red Lens, White Deep Base, Tone select switch, Separate conns for sounder and beacon
		FL/AL/R/D SEPARATE SWITCH	640454FULL-0296X	Flashni Sounder/Beacon, Amber Lens, Red Deep Base, Tone select switch, Separate conns for sounder and beacon
FLASHNI 12V	31	FL/RL/R/S 12V SND5	640204FULL-0067	Flashni 12V Sounder/Beacon, Red Lens, Red Shallow Base, Tone 5
		FL/RL/W/S 12V SND5	640202FULL-0039	Flashni 12V Sounder/Beacon, Red Lens, White Shallow Base, Tone 5
		FL/CL/W/D 12V SND5	640206FULL-0089	Flashni 12V Sounder/Beacon, Clear Lens, White Deep Base, Tone 5
		FL/BL/W/D 12V SND5	640203FULL-0068	Flashni 12V Sounder/Beacon, Blue Lens, White Deep Base, Tone 5
		FL/RL/R/S 12V Switch	640023FULL-0058	Flashni 12V Sounder/Beacon, Red Lens, Red Body, Shallow Base, Tone select switch
		FL/BL/R/S	640013FULL-0035	Flashni XE, Blue Lens, Red Shallow Base
		FL/BL/R/D CPD VERSION	640015FULL-0046X	Flashni XE, Blue Lens, Red Deep Base
		FL/CL/R/D/SEPARATE/SWITCH	640466FULL-0282	Flashni XE, Clear Lens, Red Deep Base, Separate
		FL/CL/R/D SWITCH	640007FULL-0030X	Flashni XE, Clear Lens, Red Deep Base, Tone select switch
		FL/CL/R/S SWITCH	640005FULL-0034	Flashni XE, Clear Lens, Red Shallow Base, Tone select switch
		FL/AL/R/D FLASHNI	640011FULL-0010	Flashni XE, Amber Lens, Red Deep Base
		FL/AL/W/D	640012FULL-0033X	Flashni XE, Amber Lens, White Deep Base
		FL/AL/W/D 12V SND5	640054FULL-0147X	Flashni XE,12V Sounder/Beacon, Amber Lens, White Deep Base, Tone 5
		FL/BL/W/S	640014FULL-0029	Flashni XE, Blue Lens, White Shallow Base
		FL/BL/W/D 24V	640016FULL-0011	Flashni XE, Blue Lens, White Deep Base, 24Vdc
		FL/CL/W/S SWITCH	640034FULL-0259	Flashni XE, Clear Lens, White Shallow Base, Switch
		FL/CL/W/S/24V/SEPERATE	640105FULL-0260X	Flashni XE, Clear Lens, White Shallow Base, 24Vdc, Separate
ASSERTA SOUNDER BEACON 24Vdc	32	AS/SB/24/120/R/RL	7021121FUL-0004X	Asserta Sounder/Beacon 24Vdc, 120dB, Red Lens, Red Body
		AS/SB/24/120/R/AL	7021122FUL-0113X	Asserta Sounder/Beacon, 24Vdc, Amber Lens, 120dB, Red Body
		AS/SB/24/120/R/BL	7022124FUL-0190X	Asserta Sounder/Beacon, 24Vdc Blue Lens, 120dB, Red Body
		AS/SB/24/120/G/AL	7092275FUL-0152X	Asserta Sounder/Beacon, 24Vdc, Amber Lens, 120dB, Grey Body
		AS/SB/24/110/R/RL	7021111FUL-0003X	Asserta Sounder/Beacon 24Vdc Red Lens, 110dB, Red Body
		AS/SB/24/110/R/AL	7021112FUL-0188X	Asserta Sounder/Beacon, 24Vdc, Amber Lens, 110dB, Red Body
		AS/SB/24/110/R/BL	7022123FUL-0189X	Asserta Sounder/Beacon, 24Vdc, Blue Lens, 110dB, Red Body
		AS/SB/230/R/120/RL	7022121FUL-0006	Asserta Sounder/Beacon, 230Vac, Red Lens, 120dB Red Body
		AS/SB/230/R/120/AL	7022122FUL-0114	Asserta Sounder/Beacon, 230Vac, Amber Lens, 120dB, Red Body
		AS/SB/230/R/120/BL	7092285FUL-0192	Asserta Sounder/Beacon, 230Vac, Blue Lens, 120dB, Red Body
		AS/SB/230/G/120/AL	7092276FUL-0153	Asserta Sounder/Beacon, 230Vac, Amber Lens, 120dB, Grey Body
		AS/SB/230/R/110/RL	7022111FUL-0005	Asserta Sounder/Beacon, 230Vac, Red Lens, 110dB, Red Body

Product name	Page	Product reference	Cat No	Description
BEACONS and SOUNDERS BEACONS (cont.)				
ASSERTA MIDI SOUNDER BEACON 24Vdc	33	AS/M/SB/9-60V/R/RL	7051111FUL-0128X	Asserta Midi Sounder Beacon, 9 to 60Vdc, Red Lens, Red Body
		AS/M/SB/9-60/R/CL FULLEON STANDARD	7052113FULL-0202X	Asserta Midi Sounder/Beacon, 9 to 60Vdc, Clear Lens, Red Body
		AS/M/SB/9-60V/R/AL	7052114FULL-0143X	Asserta Midi Sounder/Beacon, 9 to 60Vdc, Amber Lens, Red Body
		AS/M/SB/9-60V/R/BL CPD	7092264FUL-0141X	Asserta Midi Sounder/Beacon, 9 to 60Vdc, Blue Lens, Red Body
		AS/M/SB/9-60/G/AL	7051212FUL-0015X	Asserta Midi Sounder/Beacon, 9 to 60Vdc, Amber Lens, Grey Body
		AS/M/SB/9-60/G/RL CPD	7092281FUL-0181X	Asserta Midi Sounder/Beacon, 9 to 60Vdc, Red Lens, Grey Body
		AS/M/SB/9-60/G/AL	7051212FUL-0015X	Asserta Midi Sounder Beacon, 9 to 60Vdc, Amber Lens, Grey Body
		AS/M/SB/115/R/RL	7054111FUL-0046	Asserta Midi Sounder Beacon, 115Vac, Red Lens, Red Body
		AS/M/SB/115/R/AL	7092266FUL-0142	Asserta Midi Sounder Beacon, 115Vac, Amber Lens, Red Body
		AS/M/SB/115/G/AL	7092287FULL-0194	Asserta Midi Sounder/Beacon, 115Vac, Amber Lens, Grey Base
		AS/M/SB/230/R/RL	7052111FUL-0130	Asserta Midi Sounder/Beacon 230Vac, Red Lens, Red Body
		AS/M/SB/230/R/AL	7052212FUL-0116	Asserta Midi Sounder/Beacon, 230Vac, Amber Lens, Red Body
		AS/M/SB/230/R/CL	7052213FUL-0125	Asserta Midi Sounder/Beacon, 230Vac, Clear Lens, Red Body
		AS/M/SB/230/G/AL	7092283FUL-0186	Asserta Midi Sounder/Beacon, 230Vac, Red Lens, Grey Body
		ASSERTA MIDI RED LENS PK 5	7092291FULL-0237	Asserta Midi, Red Lens (Pack of 5)
		ASSERTA MIDI BLUE LENS PK 5	7092292FULL-0238	Asserta Midi, Blue Lens (Pack of 5)
		ASSERTA MIDI CLEAR LENS PK 5	7092293FULL-0239	Asserta Midi, Clear Lens (Pack of 5)
		ASSERTA MIDI AMBER LENS PK 5	7092294FULL-0240	Asserta Midi, Amber Lens (Pack of 5)
FIRECAT	27	12V Smoke Detector	400001FULL-0001	Smoke Dectector 12V
SQG3 AV	28	SQG3/AV/W	666057FULL-0097X	SQG3 Base AV, White
CALL POINTS				
CXL	36	CXL/G/P/R/BB/470+680	4920016FULL-0018XC	Conventional 470R/680R with LED and back box. Includes both glass and Universal plastic resettable elements.
CXL WP	36	CXL/G/P/R/BB/470+680 WP	4990047FULL-0420X	Conventional IP66 470R/680R with LED and back box. Includes both Universal glass and plastic resettable elements.
CXL YELLOW	36	CXL/GP/Y/BB Universal	4914110FUL-0370	Yellow conventional 470R/680R with LED and back box. Includes both glass and plastic resettable elements. Top label "Gas Release"
CXM	37	CXM/CO/GP/R/BB	4930010FUL-0048XC	For Older Systems - Conventional Red, Change over contacts up to 230Vac. Back box included (Glass element provided)
CXM WP	37	CXM/CO/G/R/WP	4990073FULL-0122X	For Older Systems - Conventional Red, Change over contacts up to 230Vac. Weatherproof back box included (Glass element provided)
CXM YELLOW	37	CXM/CO/G/Y/BB	4930110FUL-0049	Yellow, Conventional SPCO contacts(No LED) and back box. Glass element. Top label "Gas Release"
CXM GREEN	37	CXM/CO/P/G/BB	4931210FUL-0135	Green, Conventional SPCO contacts (No LED) and back box. Plastic element. Top label "Door Release"
		CXM/CO/GP/G/WP	4934230FULL-0462	Green, Conventional SPCO contacts (No LED) and WP back box. Glass & plastic element. Top label "Emergency Door Release"
CXM WHITE	37	CXM/CO/GP/W/BB	4920018FULL-0186C	White, Conventional SPCO contacts(No LED) and back box. Glass & plastic element. Top label "EMERGENCY"
		CXM/CO/GP/W/WP	4934231FUL-0464	White, Conventional SPCO contacts(No LED) and weatherproof back box. Glass & plastic element. Top label is BLANK
CXM BLUE	37	CXM/CO/GP/B/WP	4934233FUL-0466	Blue, Conventional SPCO contacts(No LED) and weatherproof back box. Glass & plastic element. Top label is BLANK
CXM 230	37	CXM230/CO/GP/R/BB	4934240FUL-0500	CXM 230 Call Point, Red Body with Backbox, Glass element provided.
CXK KEYSWITCH	38	CXK/2/Y/BB	4942110FUL-0036	Keyswitch 2-Way (including back box)
		CXK/2/R/BB 4T	4942010FUL-0047	Keyswitch 2-Way, Red (including back box)
BACK BOX	NOT SHOWN	CXBB/R	4990011FUL-0050	Standard Back Box (Box of 10)
COVER	NOT SHOWN	CXPC PACK OF 10 IN A BOX	4990001FUL-0022	Polycarbonate Cover (Box of 10)
		CXPC/TI	4990014FUL-0156	Polycarbonate Cover including Security Tie (Pack of 10)
RESETTABLE PLASTIC ELEMENT	NOT SHOWN	CX/P/KIT (Conversion kit)	4990010FUL-0045	Resettable Element Conversion Kit (Pack of 10)
SPARE GLASS	NOT SHOWN	CX/SPARE GLASS	516200FULL-501	Spare Glass (Pack of 10)
SPARE KEY	NOT SHOWN	CX/UK SPARE KEY	4990009FUL-0040	Spare Key (Pack of 10)

Part Numbers

Product name	Page	Product reference	Cat No	Description
BELLS				
CF 6" BELL 12	42	CFB6D12 RED	521301FULL-1301	6 Inch Motorised Bell 12Vdc, Red (Centrifugal *)
CF 6" BELL 24V	42	CFB6D24 RED	521601FULL-1601	6 Inch Motorised Bell 24Vdc, Red (Centrifugal *)
FB BELL	43	FB/12/RED	500001FULL-0001	Electronic Solenoid Bell 12 Volts DC, Red
		FB/12/GREY	500002FULL-0002	Electronic Solenoid Bell 12 Volts DC, Grey
		FB/024/R	502001FULL-2001	Electronic Solenoid Bell 24 Volts DC, Red
		FB/024/G	502002FULL-2002	Electronic Solenoid Bell 24 Volts DC, Grey
		FB/230/R/L	504001FULL-4001	Electronic Solenoid Bell 230 Volts AC, Red
		FB/230/G/L	504002FULL-4002	Electronic Solenoid Bell 230 Volts AC, Grey
REMOTE LED INDICATOR				
REMOTE LED INDICATOR	46	REM/C LED	600111FUL-0000	Remote Indicator - Red Lens
REMOTE LED BUZZER INDICATOR	46	REM/C/B LED + BUZZER	600112FUL-0000	Remote Indicator with integral buzzer - Red Lens
CSA Indicators	47	OPT.-ACOUST. LED INDIC. RED FIXED	O-1490R	OPT.-ACOUST. LED INDIC. RED FIXED
		OPT.-ACOUST. LED INDIC. GREEN FIXED	O-1490V	OPT.-ACOUST. LED INDIC. GREEN FIXED
		OPT.-ACOUST. LED INDIC. YELLOW FIXED	O-1490G	OPT.-ACOUST. LED INDIC. YELLOW FIXED
		OPTICAL-ACOUST. LED INDIC. RED	O-1490CR	OPTICAL-ACOUST. LED INDIC. RED
		OPT.-ACOUST. LED GREEN FIXED/FLASH	O-1490CV	OPT.-ACOUST. LED GREEN FIXED/FLASH
		OPT.-ACOUST. LED YELLOW FIXED/FLASH	O-1490CG	OPT.-ACOUST. LED YELLOW FIXED/FLASH
		OPT.-ACOUST. LED RED FIXED/FLASH BUZZ	O-1490BZR	OPT.-ACOUST. LED RED FIXED/FLASH BUZZ
		OPT.-ACOUST. LED GREEN FIXED/FLASH BUZZ	O-1490BZV	OPT.-ACOUST. LED GREEN FIXED/FLASH BUZZ
		OPT.-ACOUST. LED YELLOW FIXED/FLASH BUZZ	O-1490BZG	OPT.-ACOUST. LED YELLOW FIXED/FLASH BUZZ
BASES				
RED	50	Shallow Base Red	593005FULL-0027	Red Shallow Base + Locking Screw
		Deep Base Red	593001FULL-0022	Red Deep Base + Locking Screw
		U Base Red	590020FULL-0094	Red U Base + Locking Screw
WHITE	50	Shallow Base White	593006FULL-0118	White Shallow Base + locking screw
		Deep Base White	593002FULL-0017	White Deep Base + locking screw
		U Base White	590021FULL-0099	White U Base + locking screw
COMBI RED	50	CB/2/R	593004FULL-0034	Combi Base 2 x Red Deep Base
		CB/3/R	593008FULL-0321	Combi Base 3 x Red Deep Base
		CB/4/R	593009FULL-0322	Combi Base 4 x Red Deep Base
COMBI WHITE	50	CB/2/W	593010FULL-0323	Combi Base 2 x White Deep Base
		CB/3/W	593011FULL-0324	Combi Base 3 x White Deep Base
		CB/4/W	593012FULL-0325	Combi Base 4 x White Deep Base

Product name	Page	Product reference	Cat No	Description
POWER SUPPLIES				
CSA Switching Power Supply	51		82415-CSA	SWITCHING POWER SUPPLY UNIT 27,6V 1,5A
			82425-CSA	SWITCHING POWER SUPPLY UNIT 27,6V 2,5A
			82450-CSA	SWITCHING POWER SUPPLY UNIT 27,6V 5A
CSA Metal Box Power Supply	52		82415BP	METAL BOX POWER SUPPLY 27,6V 1,5A SMALL
			82415BG	METAL BOX POWER SUPPLY 27,6V 1,5A
			82425BG	METAL BOX POWER SUPPLY 27,6V 2,5A
			82450BG	METAL BOX POWER SUPPLY 27,6V 5A
DOOR RETAINERS				
Series 13000 CSA Door Retainer	56		13050-CSA	Door Retainer, 50Kg, Black
			13050-SP	Door Retainer, 50Kg, Black with door status indication
			13050-BSP	Door Retainer, 50Kg, White with door status indication
Series 1330/1340 CSA Door Retainer	57		1335-CSA	Door Retainer, 50Kg, Steel body, Black, Terminals
			1345-CSA	Door Retainer, 100Kg, Steel body, Black, Terminals
Series 1350/1360 WALL MOUNTING	58	FSMD/024/40/W/DIODE	1350-CSA	Wall Mounted Magnetic Door Release, 24Vdc, 40Kgf/390N (Includes diode protection circuit)
Series 1369 FLOOR MOUNTING	59	FSMD/024/50/FL	1369-CSA	Floor Mounted Magnet 24Vdc, 50Kgf/490N Door Retainer, 50Kg, ABS
Series 1370 / 1380 UNIVERSAL MOUNTING	60		1370-15-D	DOOR RELEASE WITH BRACKET 50KG 15CM Door Retainer, 50Kg, ABS
			1370-30-D	DOOR RELEASE WITH BRACKET 50KG 30CM Door Retainer, 50Kg, ABS
			1380-15-D	DOOR RELEASE WITH BRACKET 100KG 15CM Door Retainer, 100Kg, ABS
		FSMD/024/100/UA/LONG	1380-30-D	Universal Arm mounted MDR, 24Vdc, 300mm, 100Kgf/980N
SPARE DOOR PLATE	61	Spare Door Plate	1351-CSA	Flexible keeper plate for door fitting
FLOOR BRACKET	61	Floor mounting bracket	620020FULL-0000	Floor mounting bracket for 1320-24 / 240
			1343-CSA	WHITE FIX KEEPER PLATE Ø 45MM 30° Angle keeper plate Ø45mm white 13100 110gr
			1341-CSA	WHITE FLEXIBLE KEEPER PLATE Ø 45MM 120° Angle keeper plate Ø45mm white 13100 130gr
			1351-CSA	BLACK FLEXIBLE KEEPER PLATE Ø 55MM 120° Angle keeper plate Ø55mm black All up to 50Kg / 480N 170gr
			1361-CSA	BLACK FLEXIBLE KEEPER PLATE Ø 60MM 120° Angle keeper plate Ø60mm black All 100Kg / 980N 210gr
			1353-CSA	BLACK FIX KEEPER PLATE Ø 55MM 30° Angle keeper plate Ø55mm black All up to 50Kg / 480N 150gr
			1363-CSA	BLACK FIX KEEPER PLATE Ø 60MM 30° Angle keeper plate Ø60mm black All 100Kg / 980N 190gr
			13ST15	FLOOR/WALL-MOUNTING BRACKET 150MM 150mm bracket for wall / floor mounting 13000, 13100 500gr
			13ST25	FLOOR/WALL-MOUNTING BRACKET 250MM 250mm bracket for wall / floor mounting 13000, 13100 650gr

Part Numbers

Product name	Page	Product reference	Cat No	Description
SIGN BOARDS				
Series 5000 - Thermoplastic	64		0-5055-CSA	INDOOR LED SIGN BOARD
Series 5500 CSA Sign Board	65		0-5555-CSA	WATERPROOF LED SIGN BOARD
Series 5900 CSA Sign Board	66		5945-CSA	EN54-23 VISUAL ALARM DEVICE SIGN BOARD
			5955-CSA	EN54-3 ACOUSTIC ALARM DEVICE SIGN BOARD
			5965-CSA	EN54-23 EN54-3 VIS-ACOUSTIC ALARM DEVICE SIGN BOARD
Available writing for Sign Boards	67		CSA08584	FIRE ALARM
			CSA08587	EVACUATE PREMISES
			CSA08589	EXTINGUISHING IN PROGRESS
			CSA08665	HAZARDOUS AREA
			CSA08666	EXTINGUISHING IN PROCESS
			CSA08667	ALARM
			CSA08668	FIRE ALARM
			CSA08669	DO NOT ENTER
			CSA0866A	DOOR CLOSING
			CSA08670	ALLARME
			CSA08671	EVACUATION IMMEDIATE
			CSA08672	ENTRÉE INTERDITE
			CSA08673	ENTRITT VERBOTEN
			CSA08674	FEURALARM
			CSA08675	TIEFGARAGE SOFORT VERLANSSEN
			CSA08676	BETRETEN VERBOTEN GASALARM
			CSA08667W	ALARM
			CSA08668W	FIRE ALARM
			CSA08691W	PLEASE EVACUATE
			CSA08671W	EVACUATION IMMEDIATE
			CSA08672W	ENTRÉE INTERDITE

Product name	Page	Product reference	Cat No	Description
UL & FM APPROVED				
MB MOTORISED BELL	70	MB-G6-24-R	CN103941	MB Motor Bell, Red 6in
		MB-G6-24-S	CN104222	MB Motor Bell, Grey 6in
EXCEDER HORNS	71	HNR	CN126292	Horn, Red, Wall Mount, 3 Tones, 12/24V
		HNW	CN126356	Horn, White, Wall Mount, 3 Tones, 12/24V
		HNRC	CN128967	Horn, Red, Ceiling Mount, 3 Tones, 12/24V
		HNWC	CN128972	Horn, White, Ceiling Mount, 3 Tones, 12/24V
EXCEDER STROBES	72	STR	CN127380	Strobe, Red, Wall Mount, 8 Candela settings, 12/24V
		STW	CN127685	Strobe, White, Wall Mount, 8 Candela settings, 12/24V
		STRC	CN127477	Strobe, Red, Ceiling Mount, 8 Candela settings, 12/24V
		STWC	CN127488	Strobe, White, Ceiling Mount, 8 Candela settings,12/24V
EXCEDER LED STROBES	73	SEE WEBSITE FOR MORE INFORMATION		Exceder LED Strobes
EXCEDER LED HORN/STROBES	74	SEE WEBSITE FOR MORE INFORMATION		Exceder LED Horn / Strobes
EXCEDER HORN/STROBES	75	HSR	CN127249	Horn/strobe, Red, Wall mount, 3 Tones, 8 candela settings, 12/24V
		HSW	CN127252	Horn/strobe, White, Wall mount, 3 Tones, 8 candela settings, 12/24V
		HSRC	CN127459	Horn/strobe, Red, Ceiling mount, 3 Tones, 8 candela settings, 12/24V
		HSWC	CN127464	Horn/strobe, White, Ceiling mount, 3 Tones, 8 candela settings, 12/24V
DSM SYNC MODULE	76	DSM-12/24-R	CN126374	DSM Sync Module
PULL STATION	77	MPS-100	CN108400	Manual Pull Station
		MPS-400X	CN108403	Hazardous Area Manual Pull Station
		MPS-RODS	CN108406	MPS Scored Acrylic Reods for MPS-100
		MPS-WP	CN108405	Back Box for MPS-100
		MPS-ISB	CN108404	Back Box for MPS-100 (Indoor)
MARINE				
RoLP Marine	6	ROLP/SV/R/D MARINE	540503MED-0841X	RoLP, Red Deep Base, Marine
FLASHNI	31	FL/CL/R/S MARINE	640005MED-0312X	Flashni Sounder/Beacon, Clear Lens, Red Shallow Base. Marine
		FL/CL/R/D MARINE	640007MED-0311X	Flashni Sounder/Beacon, Clear Lens, Red Deep Base. Marine
		FL/RL/R/S MARINE	640001MED-0314X	Flashni Sounder/Beacon, Red Lens, Red Shallow Base. Marine
		FL/RL/R/D MARINE	640003MED-0313X	Flashni Sounder/Beacon, Red Lens, Red Deep Base. Marine
ASKARI COMPACT	9	AC/SV/R/S/BB MARINE	550068MED-0306X	Askari Compact Sounder, Red, Surface(BB), Tone Select Switch, Volume Control. Marine
SYMPHONI WP	25	SY/WP/R MARINE	654008MED-1032X	Symphoni Sounder Red / IP66 Version (WP). Marine
		SY/WP/W MARINE	654036MED-1033X	Symphoni Sounder White / IP66 Version (WP). Marine
SOLEX	21	SO/R/DR/10C MARINE	531924MED-1081	Solex Beacon, Red Lens, Red Deep Base, 10Cd. Marine
		SO/R/DR/15C MARINE	531028MED-1082	Solex Beacon, Red Lens, Red Deep Base, 15Cd. Marine
SOLISTA MAXI	20	SOLX/RF/RL/R/S MARINE	811021MED-0076	Solista Maxi, Red Lens, Red Flash, Red Shallow Base. Marine
		SOLX/RF/RL/R/D MARINE	811020MED-0077	Solista Maxi, Red Lens, Red Flash, Red Deep Base. Marine
CF BELL 6"	42	CFB6D24 MARINE	521601MED-9816X	6 Inch Motorised Bell 24Vdc, Red. Marine
FB BELL	43	FB/24/RED MARINE	502001MED-8015X	Electronic Solenoid Bell 24 Volts DC, Red. Marine
		FB/24/RED/WP MARINE	506001MED-8016X	Weatherproof Electronic Solenoid Bell 24 Volts DC Red. Marine

Part Numbers

Product name	Page	Product reference	Cat No	Description
MARINE (cont.)				
CXL	36	CXL/G/P/R/BB/470 + 680 MARINE	4920016MED-0476X	Conventional 470R/680R with LED and back box. Includes both glass and plastic resettable elements. Marine
		CXL/G/P/R/BB/470 + 680/WP MARINE	4990047MED-0477X	Conventional IP66 470R/680R with LED and back box. Includes both glass and plastic resettable elements. Marine
CXM	37	CXM/CO/GP/R/WP MARINE	4990073MED-0478X	For older systems - Conventional Red, Change over contacts up to 230Vac. Weatherproof back box included (Glass element provided)
ASSERTA SOUNDER	14	AS/S/24/R/110 MARINE	7011114MED-0223X	Asserta Sounder, 24v, Red Body, 110dB. Marine
		AS/S/24/R/120 MARINE	7011124MED-0224X	Asserta Sounder, 24v, Red Body, 120dB. Marine
ASSERTA SOUNDER BEACON	30	AS/SB/24/R/110/RL MARINE	7021111MED-0225X	Asserta Sounder/Beacon, 24v, Red Lens, 110dB, Red Body. Marine
		AS/SB/24/R/120/RL MARINE	7021121MED-0226X	Asserta Sounder/Beacon, 24v, Red Lens, 120dB, Red Body. Marine
ASSERTA MIDI SOUNDER	15	AS/M/S/9-60V/R MARINE	7041134MED-0220X	Asserta Midi Sounder, 9-60Vdc, Red Body. Marine
ASSERTA MIDI SOUNDER BEACON	31	AS/M/SB/9-60V/R/AL MARINE	7052114MED-0234X	Asserta Midi Sounder-Beacon, 9-60Vdc, Amber Lens, Red Body. Marine
		AS/M/SB/9-60V/R/CL MARINE	7052113MED-0221X	Asserta Midi Sounder-Beacon, 9-60Vdc, Clear Lens, Red Body, Marine
		AS/M/SB/9-60V/R/RL MARINE	7051111MED-0222X	Asserta Midi Sounder-Beacon, 9-60Vdc, Red Lens, Red Body. Marine
XPRESS				
SOLISTA LX WALL Shallow Base	18	SOL-LX-W/RF/R1/S	812013FULL-0114XE	Solista LX Wall Red body, Red flash, shallow base
SOLISTA LX WALL Deep Base	18	SOL-LX-W/RF/R1/D	812005FULL-0107XE	Solista LX Wall, Red body, Red flash, deep base
SOLISTA LX CEILING Shallow Base	19	SOL-LX-C/RF/W1/S	812022FULL-0123XE	Solista LX Ceiling, White Base, Red flash, shallow base
ROLP LX WALL	24	ROLP/R1/LX-W/RF	8500025FULL-0025XE	Rolp LX Wall, Red body, Red Flash
ROLP Red Shallow Base	6	ROLP/SV/R/S	540501FULL-0389XE	Rolp, Red body, shallow base
ROLP Red Deep Base	6	ROLP/SV/R/D	540503FULL-0403XE	Rolp, red body, Deep base
ROLP White Shallow Base	6	ROLP/SV/R/D	540502FULL-0406XE	Rolp, white body, shallow base
ASKARI COMPACT Red	9	AC/SV/R/S/BB	550068FULL-0142XE	Askari Compact, Red
ASKARI COMPACT White	9	AC/SV/W/S/BB	550072FULL-0216XE	Askari Compact White
SYMPHONI Red	10	SY/R	650001FULL-0003XE	Symphoni Sounder, Red
SQUASHNI G3	13	SQG3/SDR/W	666058FULL-0098XE	Squashni G3 Base Sounder, White
CXL CALL POINT (Indoor)	36	CXL/GP/470R+680R+LED/BB	4920016FULL-0018XE	CXL Call Point Indoor, Red
CXL CALL POINT (Outdoor)	36	CXL/GP/R/470R+ 680R+LED/WP	4990047FULL-0420XE	CXL Call Point, Outdoor, Red
CF BELL	42	CFB6D24RED	521601FULL-1601XE	CF Bell 6" Red
FB BELL	43	FB/24/R	502001FULL-2001XE	FB Bell 6" Red
CALL POINT SPARE GLASS	NOT SHOWN	CX SPARE GLASS Pk 10	516200FULL-5017E	Call Point glass for CX range 10 pack
CALL POINT SPARE KEY	NOT SHOWN	CX/UK PK OF 10 TEST KEYS	4990009FUL-0040E	Call Point Keys
LED REMOTE INDICATOR	46	REM/C/LEDINDICATOR	600111FUL-0000E	Led Remote indicator, Red Lens

Tones Table

1st Tone	2nd Tone	Type	Frequencies	Temporal Pattern		Typical Application
1	14	Alternating	800 & 970	2Hz (250ms-250ms)		BS Fire tone
2	14	Sweep	800 to 970	7Hz (7/s)		BS Fire tone
3	14	Sweep	800 to 970	1Hz (1/s)		BS Fire tone
4	14	Continuous	2850	Steady		General purpose
5	4	Sweep	2400 to 2850	7Hz		General purpose
6	4	Sweep	2400 to 2850	1Hz		General purpose
7	14	Slow whoop	500 to 1200	3.5s sweep, 0.5 s silence, then repeat		Dutch tone (NEN 2575)
8	14	Sweep	1200 to 500	1Hz		Din tone (33 404)
9	4	Alternating	2400 & 2850	2Hz (250ms-250ms)		General purpose
10	14	Intermittent	970	0.5Hz (1s On/1s Off)		PFEER alert
11	14	Alternating	800 & 970	1Hz (500ms-500ms)		BS Fire tone
12	4	Intermittent	2850	0.5Hz (1s On/1s Off)		General purpose
13	14	Intermittent	970	0.8Hz (250ms On/1s Off)		General purpose
14	14	Continuous	970	Steady		PFEER Toxic-gas
15	14	Alternating	554 & 440	100ms-400ms		French fire tone
16	16	Intermittent	660	3.3Hz (150ms On/150ms Off)		Swedish (Air raid)
17	17	Intermittent	660	0.28Hz(1.8s On/1.8s Off)		Swedish (Local warning)
18	18	Intermittent	660	0.05Hz (13s Off / 6.5Hz On)		Swedish (Pre-mess)
19	19	Continuous	660	Steady		Swedish (All clear)
20	20	Alternating	554 & 440	0.5Hz (1s On/1s Off)		Swedish (Turn out)
21	21	Intermittent	660	1Hz (500ms-500ms)		Swedish tone
22	14	Intermittent	2850	4Hz (150ms On/100ms Off)		Pelican crossing
23	14	Sweep	800 to 970	50Hz BS		Fire tone
24	4	Sweep	2400 to 2850	50Hz		General purpose
25	25	Intermittent	970	3 x 500ms pulses followed by 1.5s silence then repeat	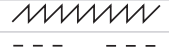	ISO 8201 / Australia
26	26	Intermittent (1)	800 to 970	3 x 500ms pulsed sweep followed by 1.5s silence then repeat	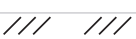	ISO 8201 / Australia
27	27	Intermittent (1)	970 & 800	3 x 500ms pulsed two tone followed by 1.5s silence then repeat	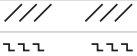	ISO 8201 / Australia
28	10	Alternating	800 & 970	2Hz (250ms-250ms)		BS Fire tone
29	33	Alternating	990 & 650	2Hz (250ms-250ms) (Symphoni tones)	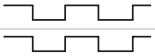	BS Fire tone
30	35	Alternating	510 & 610	2Hz (250ms-250ms) (Squashni Micro tones)	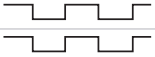	BS Fire tone
31	14	Sweep	300 to 1200	1Hz	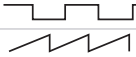	General purpose
32	35	Alternating	510 & 610	1 Hz (500mS-500mS)	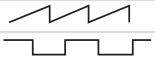	BS Fire tone
33	(1)	Continuous	990	Steady		BS Fire tone
34	(1)	Intermittent	990	1Hz (500ms On/500ms Off)		BS Fire tone
35	(1)	Continuous	510	Steady		BS Fire tone
36	(1)	Intermittent	510	1Hz (500ms On/500ms Off)		BS Fire tone
37	(1)	Continuous	850	Steady		BS Fire tone
38	(1)	Continuous	2650	Steady		General purpose

(1) Product dependant

Notes

Notes

Eaton
Electrical Sector EMEA
Route de la Longeraie 7
1110 Morges, Switzerland

Eaton
Cooper Fulleon Limited
Llantarnam Park
Cwmbran
Gwent
NP44 3AW

Tel: +44 (0)1633 628566
Fax: +44 (0)1633 876007
Web: www.cooperfulleon.com

Powering Business Worldwide

© 2014 Eaton
All Rights Reserved
Pub Reference: CAFIRV10614

www.eaton.eu