| 6600 SERIES

8-PIN DIP, SUBMINIATURE BIMETAL DISC THERMOSTAT

Introduction

The Airpax® 6600 series is a RoHS compliant, positive snap action, single pole / single throw, sub-miniature bimetallic thermostat which provides accurate and reliable sensing and switching in a single device.

The 6600 series thermostat dimensionally conforms to the international product package standard 8-pin DIP (N8A Dual Inline Package). The 6600 is ideally suited for use on printed circuit boards. Its size and shape conserves space on crowded PC boards and can be installed using auto-insertion equipment. The device is sealed to withstand wave soldering and board washing operations.



The 6600 provides fast, positive response with excellent repeatability. The thermostat has a switch capability of up to 1 amp for 48 VDC or 120 VAC, and achieves low-level switching down to 0.020 A at 5 VDC for 100,000 cycles. Temperature is pre-set at the factory and is non-adjustable in the field.

Applications include computers and computer peripherals, aircraft, automotive and test equipment. Typical uses include turning on an indicator light, sounding an audible alarm, switch on a control circuit to send a message to a display screen or even switching a circuit to shut down a system.

The 6600 thermostat is temperature tested in a computer controlled automated test equipment air-oven. Due to the ideal conditions under which it is tested, independent customer testing may be necessary to ensure that the correct calibration is utilized in the application.

It is the customer's responsibility to determine whether the product is proper for customer's use and application.

Features

- RoHS compliant per EU directive 2002 / 95 / EC
- 8-pin DIP international electronic package standard
- Ideal for surface and air sensing on PC boards
- Gold-plated contacts
- Up to 30,000 life cycles @ max standard amperage (120VAC)
- Up to 100,000 life cycles @ max 0.02 amperage (5 VDC)

OPERATION SCHEMATICS

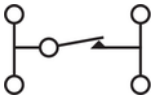

Schematic for Open on Rise Operation

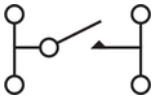

Schematic for Close on Rise Operation

Copyright © 2024 Sensata Technologies, Inc.

SPECIFICATIONS

Contact Resistance	50 milliohms max (before and after rated life)		
Contact Ratings	Cycles 25,000 30,000 100,000	Voltage 48 VDC 120 VAC 5 VDC	Amps (resistive) 1.0 1.0 0.02
Contact Operations	Either close on rise (make) or open on rise (break)		
Operating Temperature	40°C to 120°C (104°F to 248°F)		
Temperature Tolerance	Standard of ±5°C (±9°F) with nominal operating temperature settings in 5°C increments		
Short Term / Long Term Exposure Limit	Short = 260°C (500°F), 10 second duration		Long = -55°C to 160°C (-67°F to 320°F)
Dielectric Strength	1480 VAC 60Hz, 1 second duration terminals to case		
Insulation Resistance	100 Mohms at 500 VDC		
Contact Bounce	3 milliseconds max (make)		
Vibration	Per Mil-Std-202, method 204D, test condition D, 10 to 2,000 Hz		
Shock	Per Mil-Std-202, method 213, test condition C, 100 G's for 6 millisecond duration, ½ sine wave		
Seal	High temperature epoxy sealed for wave soldering and cleaning, moisture proof per Sensata specification S-722 (unit will not leak while submerged in 9" of water for a minimum of two minutes)		
Base Material	PPS (Polyphenylene Sulfide), 94 VO rated		
Terminal Material	65% Copper, 18% Nickel		
Contact Material	Gold-plated or overlay, silver crossbar		
Chemical Resistance	Unit is resistance to water, salt, alcohol, ammonia, trichlorethane and most other organic solvents		
Soldering Heat Resistance	Per Mil-Std-202F, method 210A, test condition E		
Weight	Approximately 0.45 grams		
Agency Approvals	cЯUus recognized E36687 VDE approval 40028966 RoHS Compliant per EU Directive 2002/95/EC		

Copyright © 2024 Sensata Technologies, Inc.

DIMENSIONS

Standard 8-Pin DIP Configuration

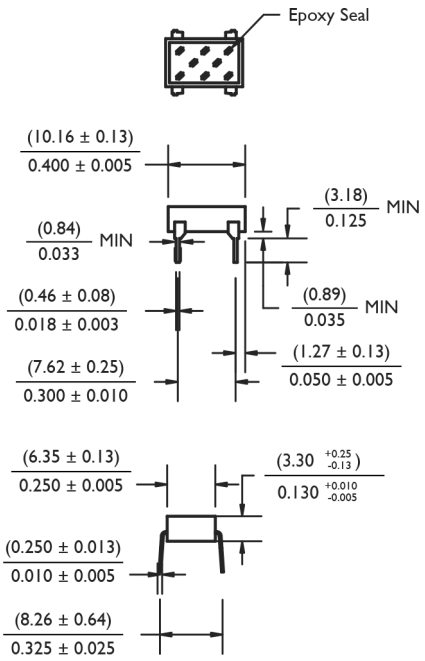

Surface Mount (Gullwing, SMT) Configuration

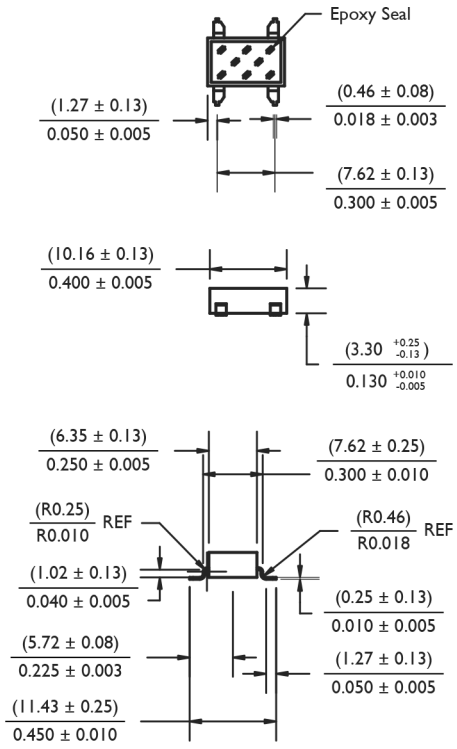

STANDARD PACKAGING

Standard and surface mount samples and production orders will be shipped in plastic, industry standard DIP shipping tubes.

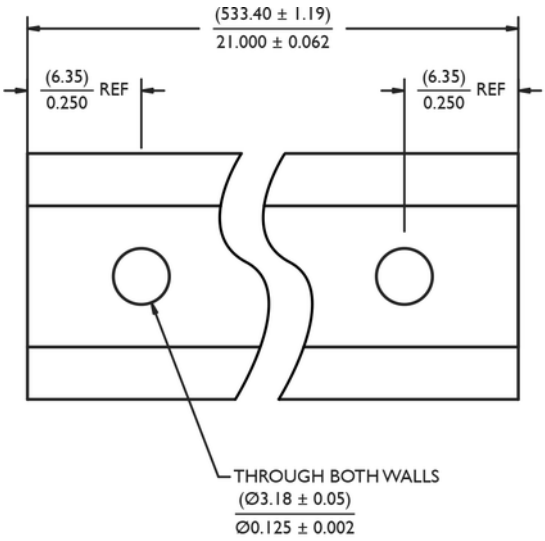

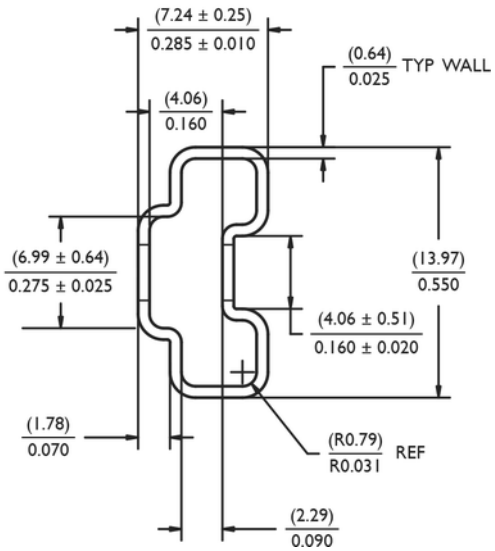

Copyright © 2024 Sensata Technologies, Inc.

STANDARD TEMPERATURE CALIBRATION TABLE

Each thermostat part number consists of functional "building blocks" to enable the user to specify clearly and precisely the desired characteristics in each category. Select the proper code in each category, then transfer it to the box indicated. Unless a special requirement is indicated, the part number will be complete when the proper temperature is selected. If you have a special requirement, please call Sensata for a factory assigned number to complete the part number.

Example:

A 66F095 thermostat will close (make contact) on a rising temperature from 90°C to 100°C and will reset open (break contact) on a falling temperature within a window of no greater than 6°C lower than the actual close temperature and no less than 60°C ambient temperature.

Special requirements require a 4 digit manufacturing dash number for ordering special features, 4 digit marking may not appear as part of the marking on the thermostat.

Special requirements may include VDE, ±3.0°C (±5.4°F) operating temperature tolerance, or surface mount (gullwing, SMT).

Temperature set point calibration is checked at Sensata Technologies with precision test equipment traceable to the US National Institute of Standards and Technology and Proven Methods. Because customer checking methods may differ, a typical variance allowed for correlation is ±1.1°C (±2.0°F).

OPERATE (±5°C)	MIN DIFFERENTIAL (°C)	MIN RESET (°C)
40	4	20
45	4	20
50	4	30
55	4	30
60	4	40
65	4	40
70	4	50
75	4	50
80	6	55
85	6	55
90	6	60
95	6	60
100	6	70
105	6	70
110	6	80
115	6	85
120	9	90

ORDERING OPTIONS

Example : 66F095-5588

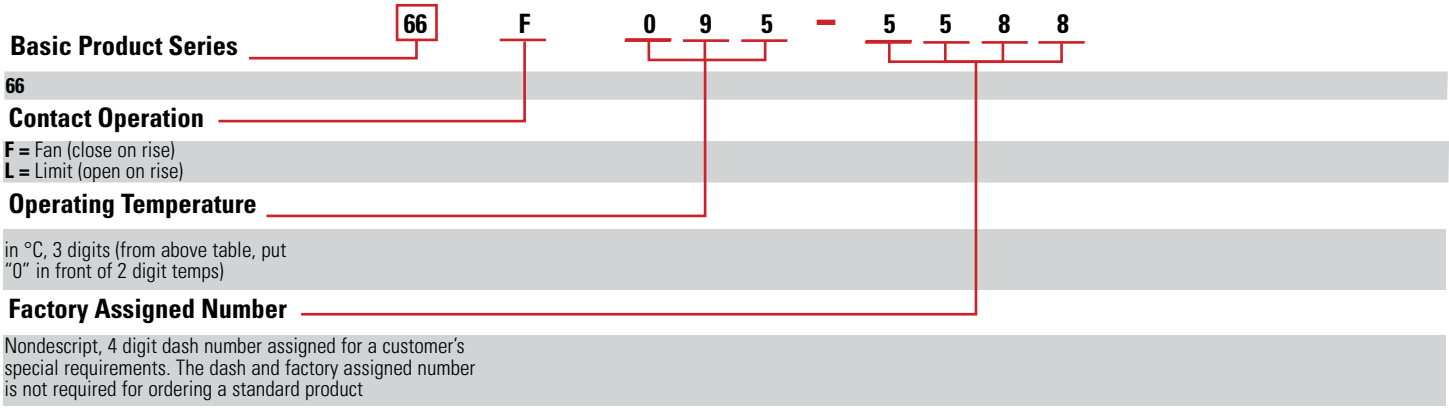

Copyright © 2024 Sensata Technologies, Inc.

AGENCY APPROVALS & CERTIFICATIONS

cRUus recognized E36687

VDE approval 40028966

RoHS Compliant per EU Directive 2002/95/EC

WARNINGS



RISK OF MATERIAL DAMAGE AND HOT ENCLOSURE
- The product's side panels may be hot, allow the product to cool before touching
- Follow proper mounting instructions including torque values
- Do not allow liquids or foreign objects to enter this product

Failure to follow these instructions can result in serious injury, or equipment damage.



HAZARD OF ELECTRIC SHOCK, EXPLOSION OR ARC FLASH
- Disconnect all power before installing or working with this equipment
- Verify all connections and replace all covers before turning on power

Failure to follow these instructions can result in death or serious injury.

Sensata Technologies, Inc. ("Sensata") data sheets are solely intended to assist designers ("Buyers") who are developing systems that incorporate Sensata products (also referred to herein as "components"). Buyer understands and agrees that Buyer remains responsible for using its independent analysis, evaluation and judgment in designing Buyer's systems and products. Sensata data sheets have been created using standard laboratory conditions and engineering practices. Sensata has not conducted any testing other than that specifically described in the published documentation for a particular data sheet. Sensata may make corrections, enhancements, improvements and other changes to its data sheets or components without notice.
Buyers are authorized to use Sensata data sheets with the Sensata component(s) identified in each particular data sheet. HOWEVER, NO OTHER LICENSE, EXPRESS OR IMPLIED, BY ESTOPPEL OR OTHERWISE TO ANY OTHER SENSATA INTELLECTUAL PROPERTY RIGHT, AND NO LICENSE TO ANY THIRD PARTY TECHNOLOGY OR INTELLECTUAL PROPERTY RIGHT, IS GRANTED HEREIN. SENSATA DATA SHEETS ARE PROVIDED "AS IS". SENSATA MAKES NO WARRANTIES OR REPRESENTATIONS WITH REGARD TO THE DATA SHEETS OR USE OF THE DATA SHEETS, EXPRESS, IMPLIED OR STATUTORY, INCLUDING ACCURACY OR COMPLETENESS. SENSATA DISCLAIMS ANY WARRANTY OF TITLE AND ANY IMPLIED WARRANTIES OF MERCHANTABILITY, FITNESS FOR A PARTICULAR PURPOSE, QUIET ENJOYMENT, QUIET POSSESSION, AND NON-INFRINGEMENT OF ANY THIRD PARTY INTELLECTUAL PROPERTY RIGHTS WITH REGARD TO SENSATA DATA SHEETS OR USE THEREOF.
All products are sold subject to Sensata's terms and conditions of sale supplied at www.sensata.com SENSATA ASSUMES NO LIABILITY FOR APPLICATIONS ASSISTANCE OR THE DESIGN OF BUYERS' PRODUCTS. BUYER ACKNOWLEDGES AND AGREES THAT IT IS SOLELY RESPONSIBLE FOR COMPLIANCE WITH ALL LEGAL, REGULATORY AND SAFETY-RELATED REQUIREMENTS CONCERNING ITS PRODUCTS, AND ANY USE OF SENSATA COMPONENTS IN ITS APPLICATIONS, NOTWITHSTANDING ANY APPLICATIONS-RELATED INFORMATION OR SUPPORT THAT MAY BE PROVIDED BY SENSATA.
Mailing Address: Sensata Technologies, Inc., 529 Pleasant Street, Attleboro, MA 02703, USA.

Copyright © 2024 Sensata Technologies, Inc.

Rev,01/19/2024

CONTACT US

Americas
+1 (888) 438 2214
sensors@sensata.com
Europe, Middle East & Africa
+31 (74) 357 8156 (Klixon+Airpax)
temperature-info.eu@sensata.com
Asia Pacific
sales.isasia@list.sensata.com
China +86 (21) 2306 1500
Japan +81 (45) 277 7117
Korea +82 (31) 601 2004
India +91 (80) 67920890
Rest of Asia +886 (2) 27602006 ext 2808