O6T403

Diffuse reflection sensor

O6T-FNKG/5M

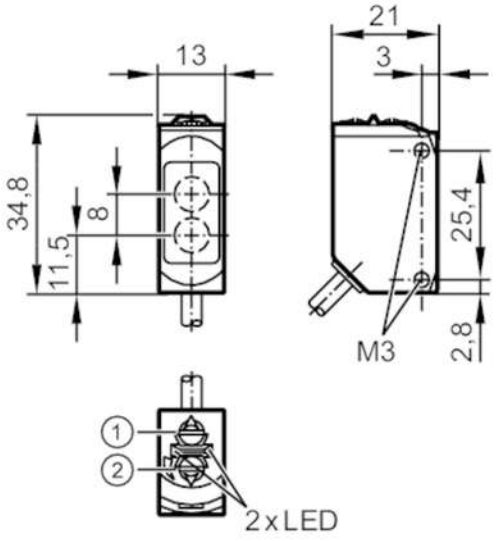

1 output function switch
2 potentiometer sensitivity
receiver in upper lens
transmitter in lower lens

Product characteristics		
Type of light		red light
Housing		rectangular
Application		
Function principle		Diffuse reflection sensor
Application		suited for use in the machine tool industry
Electrical data		
Operating voltage	[V]	10...30 DC
Current consumption	[mA]	16; ((24 V))
Protection class		III
Reverse polarity protection		yes
Type of light		red light
Wave length	[nm]	633
Outputs		
Electrical design		NPN
Output function		light-on/dark-on mode; (selectable)
Max. voltage drop switching output DC	[V]	2.5
Permanent current rating of switching output DC	[mA]	100
Switching frequency DC	[Hz]	1000
Short-circuit protection		yes
Type of short-circuit protection		pulsed

O6T403

Diffuse reflection sensor

O6T-FNKG/5M

Detection zone			
Range	[mm]	5...500; (white paper 200 x 200 mm 90% remission)	
Setting range	[mm]	100...500	
Range adjustable		yes	
Max. light spot diameter	[mm]	15	
Light spot dimensions refer to		at maximum range	
Operating conditions			
Ambient temperature	[°C]	-25...60	
Protection		IP 65; IP 67; IP 68	
Tests / approvals			
EMC		EN 60947-5-2	
MTTF	[years]	896	
UL approval		UL Approval no.	E018
Mechanical data			
Weight	[g]	133.3	
Housing		rectangular	
Dimensions	[mm]	34.8 x 13 x 21	
Materials		housing: stainless steel (316L/1.4404); plastics: PPSU; Sealing: FKM	
Lens material		PMMA	
Lens alignment		side lens	
Tightening torque	[Nm]	1; (screws)	
Displays / operating elements			
Display		switching status	1 x LED, yellow
		operation	1 x LED, green
Remarks			
Remarks		operating voltage "supply class 2" according to cULus	
Pack quantity		1 pcs.	

O6T403

Diffuse reflection sensor

O6T-FNKG/5M

Electrical connection

Cable: 5 m, PUR; 3 x 0.25 mm²

Connection

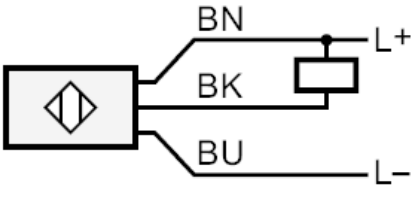

	Core colours :
BN =	brown
BK =	black
BU =	blue

Diagrams and graphs

excess gain graph

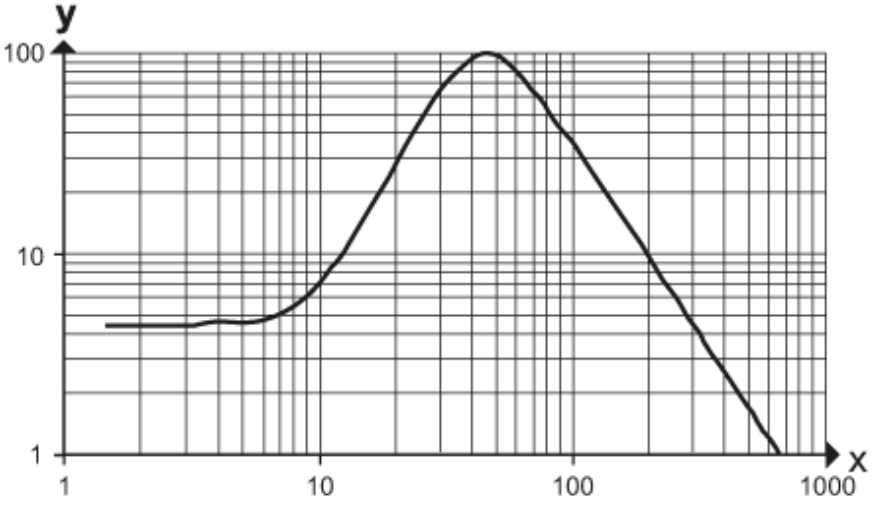

x: distance [mm]

y: excess gain factor