KG5079

Capacitive NAMUR sensor

KG-2080-N/6M/1D/1G

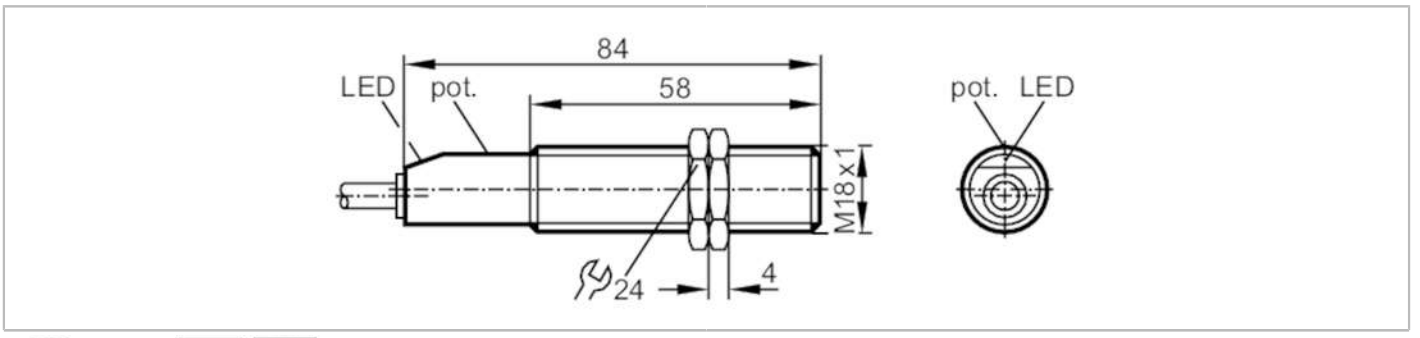

Product characteristics		
Electrical design		NAMUR
Output function		normally closed
Sensing range	[mm]	8
Housing		threaded type
Dimensions	[mm]	M18 x 1 / L = 84
Electrical data		
Connection to switching amplifiers		yes
Switching amplifiers		connection to certified intrinsically safe circuits with the max. values: U = 15 V / I = 50 mA / P = 120 mW
Nominal voltage DC	[V]	8.2; (1kΩ)
Supply voltage DC	[V]	7.5...15
Current consumption	[mA]	< 1; (disabled; conductive: > 2,2)
Protection class		II
Outputs		
Electrical design		NAMUR
Output function		normally closed
Switching frequency DC	[Hz]	4
Detection zone		
Sensing range	[mm]	8
Sensing range adjustable		yes
Factory setting sensing range	[mm]	8
Real sensing range Sr	[mm]	8 ± 10 %
Accuracy / deviations		
Correction factor		glass: 0.4 / water: 1 / ceramics: 0.2 / PVC: 0.2
Hysteresis	[% of Sr]	1...15
Switch point drift	[% of Sr]	-15...15
Operating conditions		
Ambient temperature	[°C]	-20...60
Protection		IP 67
Tests / approvals		
Approval		BVS 13 ATEX E009 X; IECEx BVS 13.0015 X

KG5079

Capacitive NAMUR sensor

KG-2080-N/6M/1D/1G

ATEX marking		II 1G Ex ia IIB T4 Ga	
		II 1D Ex ia IIIC T135°C Da	
EMC		EN 61000-4-2 ESD	- kV CD / 8 kV AD
		EN 61000-4-3 HF radiated	3 V/m
		EN 61000-4-4 Burst	2 kV
		EN 61000-4-6 HF conducted	3 V
		EN 55011 emission	class B
Shock resistance		EN 60947-5-2	
MTTF	[years]	503	
Safety classification			
Max. internal capacitance	[nF]	11.5	
Max. internal inductance	[µH]	3	
Mechanical data			
Weight	[g]	320	
Housing		threaded type	
Mounting		non-flush mountable	
Dimensions	[mm]	M18 x 1 / L = 84	
Thread designation		M18 x 1	
Materials		PBT	
Displays / operating elements			
Display		switching status	1 x LED, yellow
Accessories			
Items supplied		lock nuts: 2	
Remarks			
Pack quantity		1 pcs.	
Electrical connection			

Cable: 6 m, PVC; 2 x 0.5 mm²

Connection

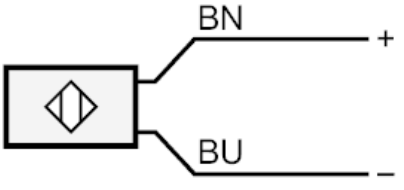

Core colours :
BN = brown
BU = blue