Noncontact Temperature Measurement for Industrial Applications & OEMs

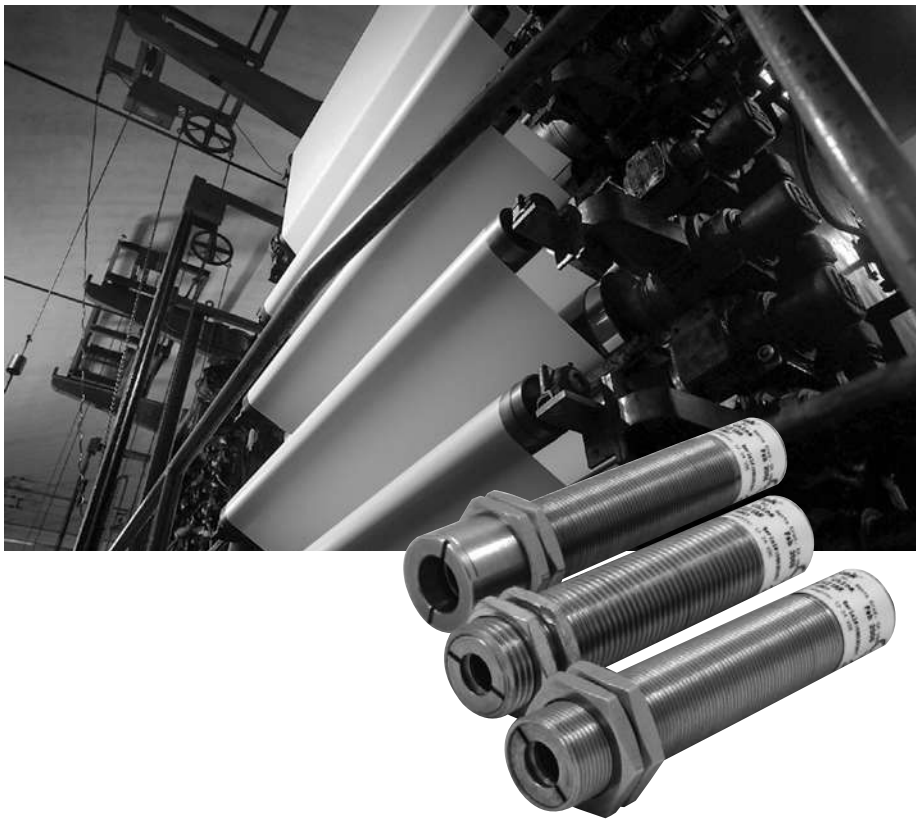

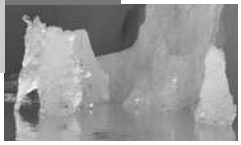

Raytek®
A Fluke Company

sales@GlobalTestSupply.com **Raytek-Direct.com** 1.888.610.7664

CM Highlights

- **Scaleable 0-5 V, type J or K output**
- **Wide -20°C to 500°C (-4°F to 932°F) temperature range**
- **Rugged IP 65 (NEMA-4) stainless steel housing**
- **Rugged 13:1 optics at 90% energy**
- **150 mSec (95%) response time**
- **Alarm output**
- **Sensor status/self diagnostic indicator LED**
- **RS232 digital communications for sensor set-up and monitoring**
- **Adjustable signal processing**
- **DataTemp® Multidrop software compatible**
- **Accessories for air purging and lens protection**

The Raytek® CM sensor provides the advantages of infrared temperature measurement in a powerful, compact, integrated sensor. Designed for easy integration, the CM sensor can easily replace traditional contact probes with a J-type or K-type thermocouple output, or with a user scaleable 0-5 volt output, if your application is susceptible to noise.

The CM sensor is designed to measure target temperatures ranging from -20°C to 500°C (-4°F to 932°F). The CM's onboard electronics are protected by a rugged IP 65 (NEMA-4) stainless steel housing, allowing the sensor to function in ambient temperatures to 70°C (160°F) without cooling.

Although small in size, the CM is loaded with advanced features. An RS232 digital interface allows the user to configure all programmable sensor variables with the powerful DataTemp Multidrop software included with each sensor. These include a 24 volt DC alarm output triggered by target temperature or head ambient temperature, peak hold, valley hold or variable averaging signal processing, adjustable target emissivity settings and adjustable window transmissivity setting. The built-in sensor health LED provides a convenient on-line indicator of the sensor's operating status and aids in troubleshooting initial sensor set up.

Compact. Powerful. Easy to install. Affordable. The Raytek CM sensor is the ideal solution for both OEM and end-user applications.

Measurement Specifications

Temperature Range	-20ºC to 500ºC (-4ºF to 932ºF)
Accuracy (mV)	± 1.5% of reading or ± 2ºC, whichever is greater [1,2]
Accuracy (t/c)	± 1.5% of reading ± 2ºC or ± 4ºC, whichever is greater[1,2,3]
Spectral Response	8 to 14 microns
Repeatability (digital and voltage) Repeatability (t/c)	± 0.5% of reading or ± 2ºC, whichever is greater ± 0.5% of reading ± 1ºC or ± 2ºC, whichever is greater
Temperature Resolution	0.1°C
Response Time (95%)	150 mSec
Emissivity	0.10 to 1.10 (adjustable)
Transmissivity	0.10 to 1.00 (adjustable)
Signal Processing	Peak hold, valley hold, variable averaging
Self diagnostics/sensor status	Normal operation, alarm, out of range, unstable, sensor fault
Bore-Sight tolerance [4]	3º @ focal point

[1] Accuracy from -20 to 0ºC is ±3.5ºC (Digital and voltage), ± 5.5ºC (t/c)

[2] Accuracy and resolution specifications are valid for ambient temperature 23ºC ± 5ºC, e = 0.95 and calibration geometry

[3] Accuracy measured on the 0-5 VDC output or RS232 for t/c models is ± 1.5% of reading or ± 2ºC, whichever is greater

[4] Typical values measured at focal distance

Nominal Optical Specifications

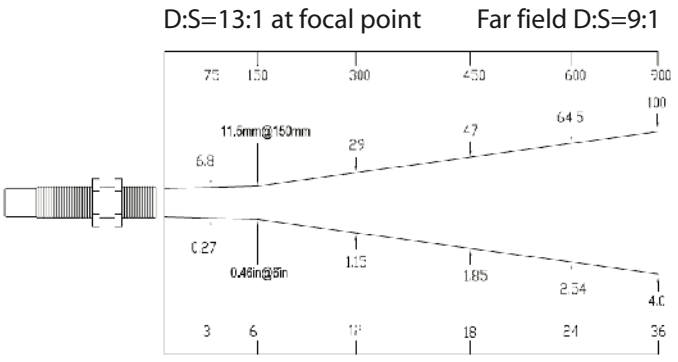

D:S is the optical resolution expressed as a ratio of the distance to the target spot divided by the diameter of the spot.

Nominal spot size based on 90% energy.

sales@GlobalTestSupply.com Raytek-Direct.com 1.888.610.7664

Electrical Specifications

Analog Outputs	Model specific Type J, Type K or scaleable 0-5V voltage output
Cable Length	1m (3.3 ft) standard 3m (9.8 ft) cables optional
Thermocouple Output Impedance	100 ohms
Voltage Output Minimum Load Impedance	50K ohms
Power Supply	24 VDC ±20% @ 20mA
Digital Output [5]	Two-way RS232 digital output
Alarm Output [5]	Transistor, 24VDC @ 20mA

[5] Digital output and alarm output share a common wire. User selects either alarm output or RS232 communication via Datatemp Multidrop software.

Sensor Specifications

Environmental Rating	IP 65 (NEMA-4)
Ambient Temperature Range	-10ºC to 70°C (14ºF to 160°F)
Cable Temperature Range	-30ºC to 105ºC (-22ºF to 220ºF)
Storage Temperature	-20ºC to 85°C (-4ºF to 185°F)
Relative Humidity	10 to 95%, non-condensing
Shock	IEC 68-2-27 (MIL STD 810D) 50 g's, 11 mSec, any axis
Vibration	IEC 68-2-27 (MIL STD 810D) 3 g's, any axis, 11–200 Hz
Weight	1m cable model: <200 g (7 oz)

Sensor Dimensions

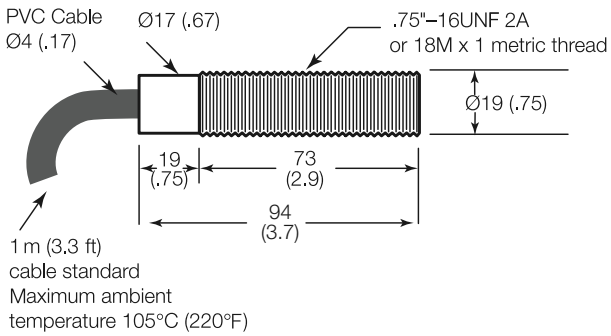



Accessories Options

Each CM sensor includes two mounting nuts, 1m (3.3ft.) of cable, and a quick start guide. 3m (9.8ft) cables are also available.

Adjustable or fixed mounting bracket for sensing head (XXXCIADJB or XXXCIACFB)





Air purge jacket to keep lens or right angle mirror clean (XXXCMAP or XXXCMAPM for metric version)

Protective lens covering (XXXCMACPW or XXXCMACPWM)





Right angle mirror to ease installation into tight locations (XXXCMACRA or XXXCMACRAM)

sales@GlobalTestSupply.com Raytek-Direct.com 1.888.610.7664

RAYCMLT

A	B	C
Output	Cable Length	Housing Thread

Typical Model Number RAYCMLTV3

Model	Description
RAYCMLT	Raytek infrared temperature sensor
Code A	**Output**
J	Type J Thermocouple Output
K	Type K Thermocouple Output
V	Voltage Output (Linear, scaleable from 0-5V)
Code B	**Cable Length**
	1M (3.3ft) Cable
3	3M (9.8ft) Cable
Code C	**Housing thread**
	Standard 0.75-16 UNF
M	18 MX1 Metric

Accessory Dimensions

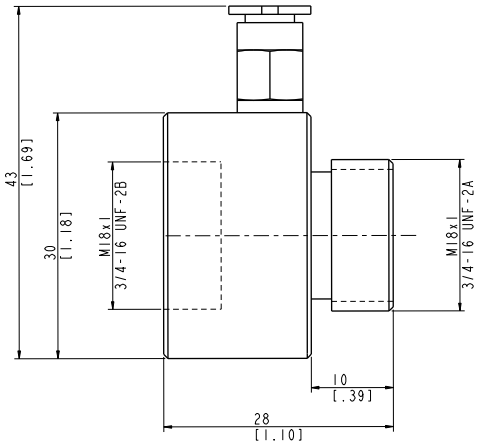

Air purge collar

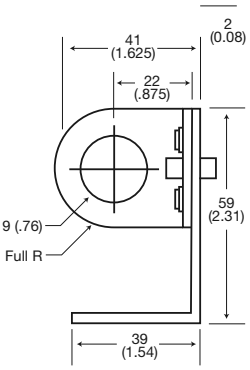

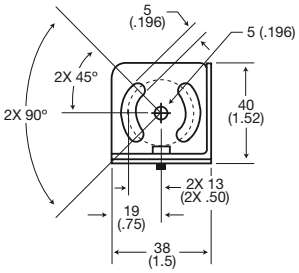

Adjustable Mounting Bracket

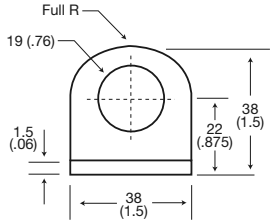

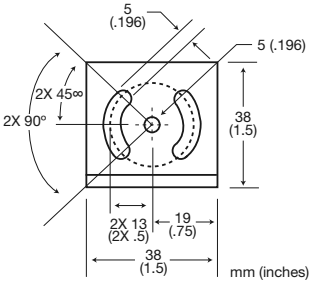

Fixed Mounting Bracket

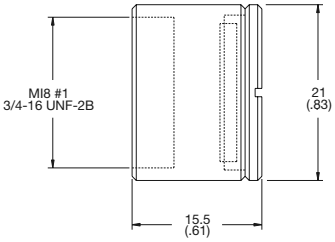

Protective Window

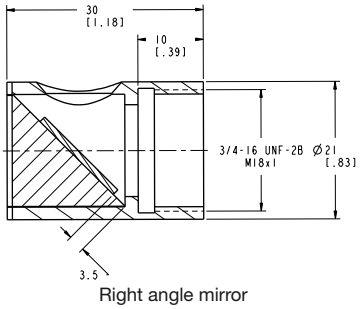

Right angle mirror

The Worldwide Leader in Noncontact Temperature Measurement

Raytek Corporation
Worldwide Headquarters
Santa Cruz, CA USA
Tel: 1 800 227 8074 (USA and Canada, only)
1 831 458 3900
solutions@raytek.com

European Headquarters
Berlin, Germany France United Kingdom

www.raytek.com

sales@GlobalTestSupply.com **Raytek-Direct.com** 1.888.610.7664