# PK6532

## Pressure switch with intuitive switch point setting

PK-100-SFG14-HCPKG/US/ /W

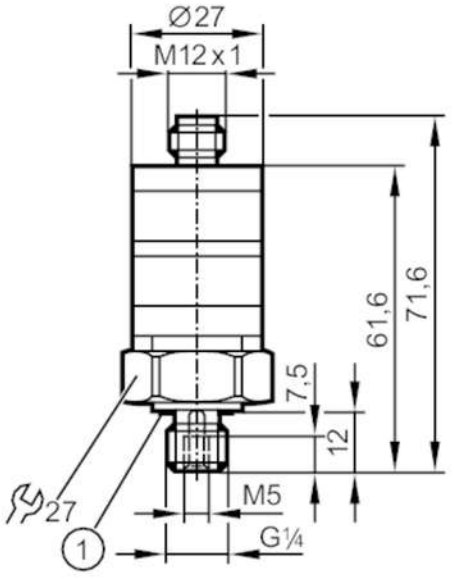


1 Sealing

| | | | |
|---|---|---|---|
| **Product characteristics** | | | |
| Number of inputs and outputs | | Number of digital outputs: 2 | |
| Measuring range | | 0...100 bar | 0...10 MPa |
| Process connection | | threaded connection G 1/4 external thread internal thread:M5 | |
| **Application** | | | |
| Application | | for industrial applications | |
| Media | | liquids and gases | |
| Medium temperature | [°C] | -25...80 | |
| Min. bursting pressure | | 1000 bar | 100 MPa |
| Pressure rating | | 200 bar | 20 MPa |
| Type of pressure | | relative pressure | |
| **Electrical data** | | | |
| Operating voltage | [V] | 9.6...32 DC | |
| Current consumption | [mA] | < 25 | |
| Min. insulation resistance | [MΩ] | 100; (500 V DC) | |
| Protection class | | III | |
| Reverse polarity protection | | yes | |
| **Inputs / outputs** | | | |
| Number of inputs and outputs | | Number of digital outputs: 2 | |
| **Outputs** | | | |
| Total number of outputs | | 2 | |
| Output signal | | switching signal | |
| Electrical design | | PNP | |
| Number of digital outputs | | 2 | |
| Output function | | complementary | |

# PK6532

## Pressure switch with intuitive switch point setting

PK-100-SFG14-HCPKG/US/ /W

| | | | |
|---|---|---|---|
| Max. voltage drop switching output DC | [V] | 2 | |
| Permanent current rating of switching output DC | [mA] | 500 | |
| Switching frequency DC | [Hz] | 100 | |
| Short-circuit protection | | yes | |
| Type of short-circuit protection | | pulsed | |
| Overload protection | | yes | |
| **Measuring/setting range** | | | |
| Measuring range | | 0...100 bar | 0...10 MPa |
| Set point SP | | 5...100 bar | 0.5...10 MPa |
| Reset point rP | | 3...98 bar | 0.3...9.8 MPa |
| **Accuracy / deviations** | | | |
| Switch point accuracy [% of the final value] | | < ± 2,5; (Setting accuracy) | |
| Repeatability [% of the final value] | | < ± 0,5; (with temperature fluctuations < 10 K) | |
| Characteristics deviation [% of the final value] | | < ± 1,5 (BFSL) / < ± 2,5 (LS); (BFSL = Best Fit Straight Line; LS = limit value setting) | |
| Temperature drift per 10 K | | < ± 0.5 | |
| **Software / programming** | | | |
| Adjustment of the switch point | | setting rings | |
| **Operating conditions** | | | |
| Ambient temperature | [°C] | -25...80 | |
| Storage temperature | [°C] | -40...100 | |
| Protection | | IP 67 | |
| **Tests / approvals** | | | |
| EMC | | DIN EN 61000-6-2 | |
| | | DIN EN 61000-6-3 | |
| Shock resistance | | DIN IEC 68-2-27 | 50 g (11 ms) |
| Vibration resistance | | DIN IEC 68-2-6 | 20 g (10...2000 Hz) |
| MTTF | [years] | 713 | |
| Pressure Equipment Directive | | Sound engineering practice; can be used for group 2 fluids; group 1 fluids on request | |
| **Mechanical data** | | | |
| Weight | [g] | 94.5 | |
| Housing | | cylindrical | |
| Dimensions | [mm] | Ø 27 / L = 71.6 | |
| Materials | | PBT; PC; FKM; stainless steel (316L/1.4404) | |
| Materials (wetted parts) | | stainless steel (316L/1.4404); FKM | |
| Min. pressure cycles | | 50 million | |
| Tightening torque | [Nm] | 25 | |
| Process connection | | threaded connection G 1/4 external thread internal thread:M5 | |
| Restrictor element integrated | | no (can be retrofitted) | |

# PK6532

## Pressure switch with intuitive switch point setting

PK-100-SFG14-HCPKG/US/ /W

| Displays / operating elements | | |
|---|---|---|
| Display | operation | LED, green |
| | switching status | LED, yellow |
| With scale | yes | |

| Remarks | |
|---|---|
| Pack quantity | 1 pcs. |

**Electrical connection**

Connector: 1 x M12; coding: A




Connection

