EUROSENSOR

LINEAR POSITION SENSOR FOR MOTORSPORTS: ELPM SERIES



- **Extremely robust and compact, specifically for Motorsports**
- **Aluminium housing sealed to IP67**
- **Elastomer damped wipers for shock and vibration durability**
- **Self-aligning pivot bearing mountings with optional snap-on version for quick installation / removal**
- **Extended 'S' sealing option for enhanced reliability and longer life**

The motorsports proven ELPM series linear position sensor provides long life and extremely reliable performance for harsh environment position measurement applications such as ride height, suspension and steering angle measurement. The compact 9.5 mm diameter sensor includes a conductive plastic resistance element technology with multi damped wipers that maintains complete and even contact with very low electrical noise, even under the most arduous physical and environmental conditions. The IP67 sealing system employed in the design may be enhanced with the extended 'S' sealing option for improved reliability and endurance where unpredictable wet and hostile environmental conditions exist. The ELPM series offers stroke lengths from 25 to 175 mm in convenient increments with self aligning pivot bearing mountings or optional snap-on mountings with the ELPM-Pop option for fast installation or removal. Further options include a spring return version as well as customer specified mounting and electrical connector options on request.

Specifications	
Electrical stroke	25 to 175mm (7 range options)
Mechanical stroke	as electrical stroke
Independent linearity	Typically +/-1%, improved linearity upon request
Max. voltage	24V DC
Recommended wiper current	< 10µA
Temperature range	ELPM u. ELPM-RCE: -30 to 150°C (short term 175°C) ELPM-POP: -30 to 140°C
Mechanical life	>25 x 10^6 operations
Sealing	IP67 (optional 'S' version for extended IP67 performance)
Mounting	Standard version: rod end bearings POP: snap on RCE: rear cable exit
Cable type / length	24 AWG Raychem 55M-wire, FDR25 sleeve /500mm
Operational speed	10 m/sec max.
Power rating	0.25W at 40°C

Ordering information

(Please use the characters in the chart below to construct your product code)

Sample code ELPM(S) - 25 - POP

Series

ELPM

optional "S" version

Electrical stroke

see table below

Mounting options

Blank = standard

POP = snap-on

RCE = rear cable exit

Custom options available on demand

	Unit	ELPM / ELPM-RCE and ELPMS extended sealing options							ELPM-POP and ELPMS-POP extended sealing options						
Order code		25	50	75	100	125	150	175	25	50	75	100	125	150	175
Electrical stroke	mm	25	50	75	100	125	150	175	25	50	75	100	125	150	175
retracted mounting distance	mm	95	120	145	178	203	228	253	115	149	175	205	230	260	285
Body length	mm	75	100	125	153	178	203	228	88	113	138	173	198	228	253
Resistance +/- 20%	kΩ	2.5	5.0	7.5	10.0	10.0	10.0	10.0	2.5	5.0	7.5	10.0	10.0	10.0	10.0
Weight	g	26	29	33	37	43	46	51	23	27	31	35	41	44	57

Dimensions

ELPM and ELPMS extended sealing option



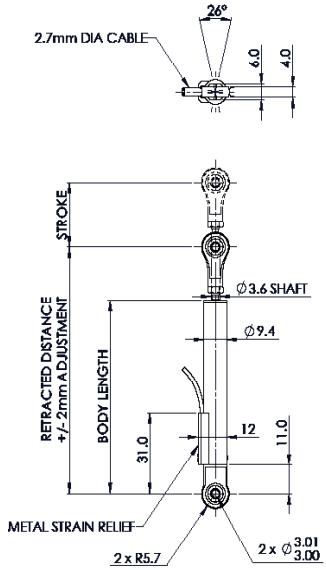

ELPM-Pop and ELPMS-Pop extended sealing option



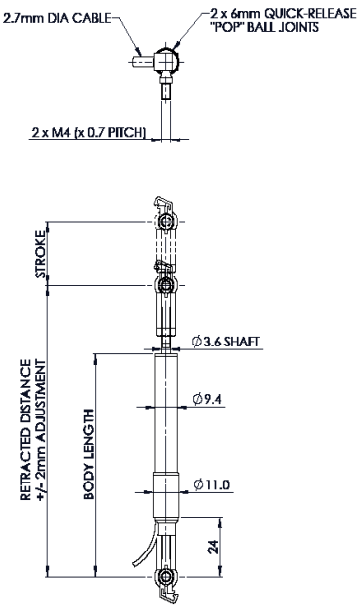

ELPM-RCE version



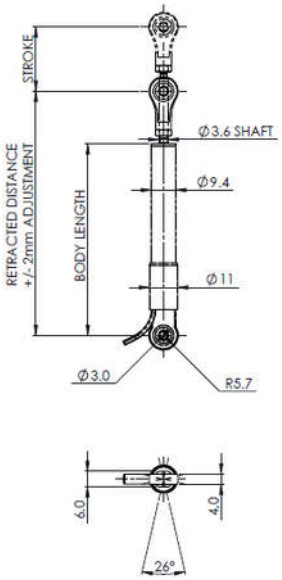

ELPM-SO version with spring loaded shaft

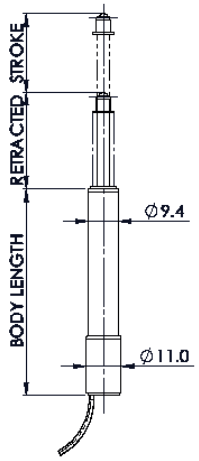

Wiring connections

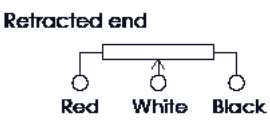

Black: GND / 0V

Red: +VE Supply

White: Signal out