E10844

Jumper cable with valve plug

VVDAC041MSS00,3A03STAH030VAS

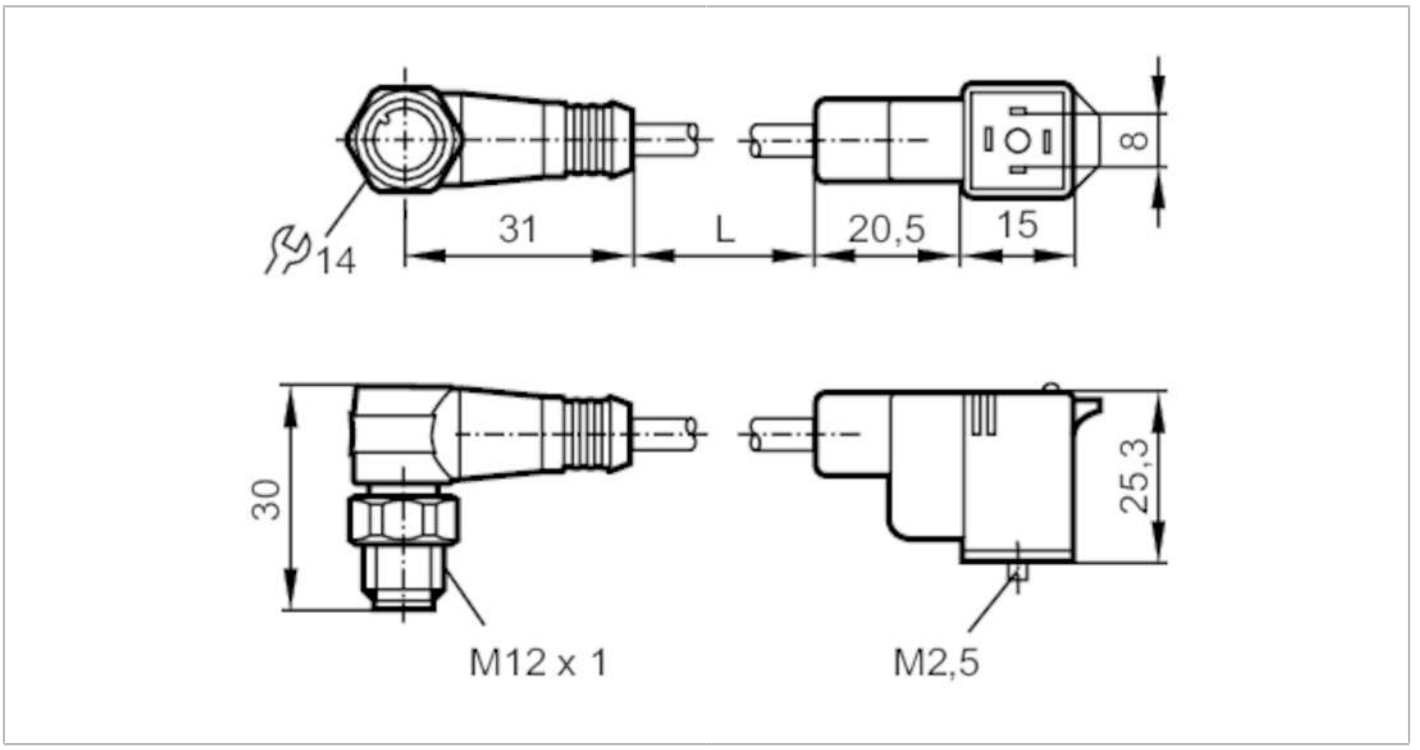

Application		
Special feature		Halogen-free
Electrical data		
Operating voltage	[V]	< 24 AC/DC
Overvoltage protection		yes; (VDR)
Operating conditions		
Ambient temperature	[°C]	-25...90
Protection		IP 67
Mechanical data		
Weight	[g]	45.7
Materials		TPU
Moulded-body material		TPU
Material nut		stainless steel (1.4404 / 316L)
Displays / operating elements		
Display	operation	1 x LED, yellow
Accessories		
Items supplied		screw
		panel for labelling
Remarks		
Pack quantity		1 pcs.

E10844

Jumper cable with valve plug

VVDAC041MSS00,3A03STAH030VAS

Electrical connection - plug

Connector: 1 x M12, angled; coding: A; Moulded body: TPU; Locking: stainless steel (1.4404 / 316L); Tightening torque: 0.5 Nm

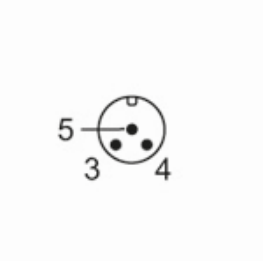

Electrical connection

Cable: 0.3 m, PUR, Halogen-free, black, Ø 4.8 mm; 3 x 0.5 mm² (16 x Ø 0.2 mm)

Connection

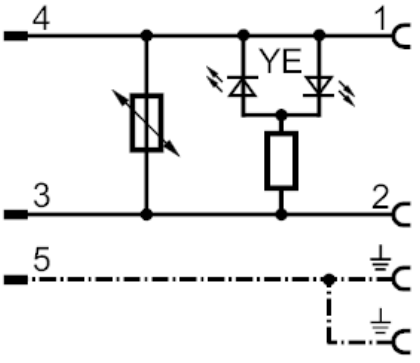

Electrical connection - socket

Connector: 1 x valve type C DIN, angled; Moulded body: TPU; Locking: stainless steel (1.4404 / 316L); Tightening torque: 0.5 Nm

