

Model Number

RL31-8-2500-IR/59/73c/136

Diffuse mode sensor
with 4-pin, M12 x 1 connector

Features

- Highly visible LED
- Powerful push-pull output
- Compact and stable housing
- Protection class II

Dimensions

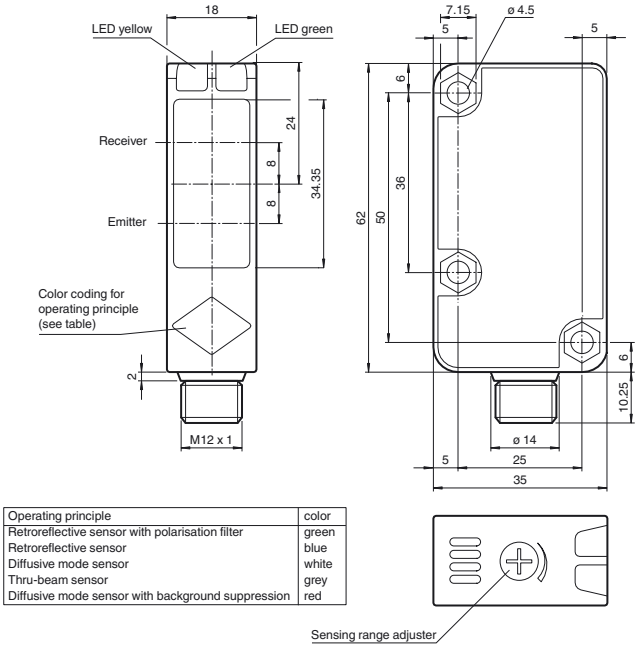

Operating principle	color
Retroreflective sensor with polarisation filter	green
Retroreflective sensor	blue
Diffusive mode sensor	white
Thru-beam sensor	grey
Diffusive mode sensor with background suppression	red

Electrical connection

Option:

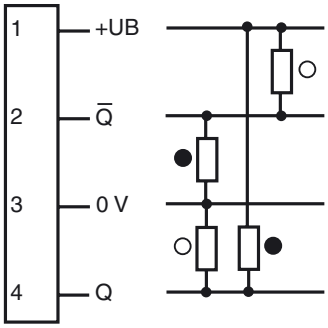

○ = Light on
● = Dark on

Indicators/operating means

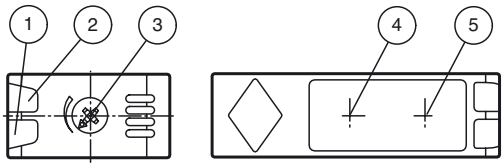

1	Operating display	green
2	Signal display	yellow
3	Sensing range adjuster	
4	Emitter	
5	Receiver	

Release date: 2014-08-18 10:51 Date of issue: 2014-08-18 218711_eng.xml

Technical data

General specifications		
Detection range		0 ... 2500 mm adjustable
Reference target		standard white 200 mm 200 mm
Light source		IRED
Light type		modulated infrared light , 850 nm
Polarization filter		no
Diameter of the light spot		approx. 50 mm at a distance of 2.5 m
Angle of divergence		2 °
Ambient light limit		50000 Lux ; according EN 60947-5-2
Indicators/operating means		
Operation indicator		LED green: power on
Function indicator		LED yellow, lights up with receiver lit
Control elements		Detection range adjuster
Electrical specifications		
Operating voltage	U_B	10 ... 30 V DC , class 2
Ripple		10 %
No-load supply current	I_0	≤ 20 mA
Output		
Switching type		dark on
Signal output		2 push-pull (4 in 1) outputs, short-circuit protected, reverse polarity protected
Switching voltage		max. 30 V DC
Switching current		max. 100 mA
Voltage drop	U_d	≤ 1.5 V
Switching frequency	f	≤ 500 Hz
Response time		≤ 1 ms
Ambient conditions		
Ambient temperature		-30 ... 55 °C (-22 ... 131 °F)
Storage temperature		-40 ... 70 °C (-40 ... 158 °F)
Mechanical specifications		
Degree of protection		IP67
Connection		4-pin, M12 x 1 connector
Material		
Housing		Polycarbonate
Optical face		PMMA
Mass		25 g
Compliance with standards and directives		
Directive conformity		EMC Directive 2004/108/EC
Standard conformity		
Product standard		EN 60947-5-2:2007 IEC 60947-5-2:2007
Approvals and certificates		
Protection class		II , rated insulation voltage ≤ 250 V AC with pollution degree 1-2 according to IEC 60664-1 Output circuit basis insulation of input circuit according to EN 50178, rated insulation voltage 240 V AC
UL approval		cULus Listed, Class 2 Power Source, Type 1 enclosure
CCC approval		CCC approval / marking not required for products rated ≤36 V

Curves/Diagrams

Characteristic response curve

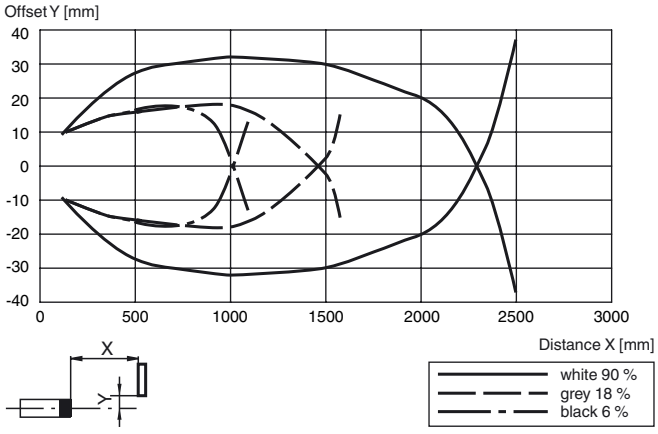

Accessories

OMH-RL31-01
Mounting bracket

OMH-RL31-02
Mounting bracket narrow

OMH-RL31-03
Mounting bracket narrow

OMH-RL31-04
Mounting aid for round steel ø 12 mm or sheet 1.5 mm ... 3 mm

OMH-RL31-05
Mounting bracket with M10 threaded rod

OMH-RL31-06
Stainless steel mounting bracket with adjustable half clamp on the side

V1-G-2M-PUR
Female cordset, M12, 4-pin, PUR cable

V1-W-2M-PUR
Female cordset, M12, 4-pin, PUR cable

Other suitable accessories can be found at www.pepperl-fuchs.com

Release date: 2014-08-18 10:51 Date of issue: 2014-08-18 218711_eng.xml

Refer to “General Notes Relating to Pepperl+Fuchs Product Information”.
Pepperl+Fuchs Group www.pepperl-fuchs.com
USA: +1 330 486 0001 fa-info@us.pepperl-fuchs.com
Germany: +49 621 776 4411 fa-info@de.pepperl-fuchs.com
Singapore: +65 6779 9091 fa-info@sg.pepperl-fuchs.com
PEPPERL+FUCHS SENSING YOUR NEEDS

Relative received light strength

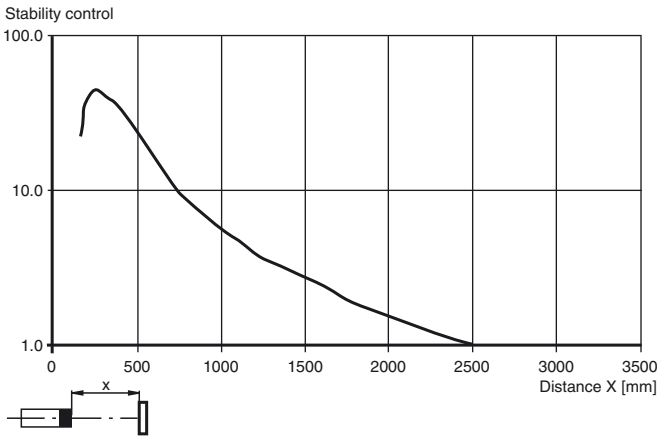

Detection ranges

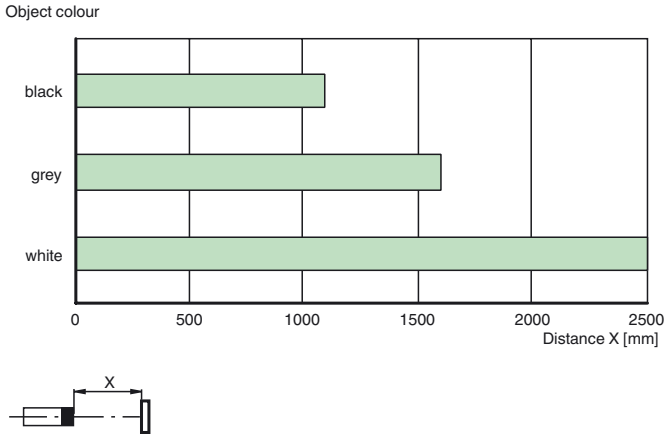

Release date: 2014-08-18 10:51 Date of issue: 2014-08-18 218711_eng.xml