THE INFORMATION CONTAINED IN THIS DRAWING IS THE SOLE PROPERTY OF L-COM, INC. ANY REPRODUCTION IN PART OR WHOLE WITHOUT THE WRITTEN PERMISSION OF L-COM, INC. IS PROHIBITED.

REVISIONS			
REV	DESCRIPTION	DATE	APPROVED
J	ECN 9043: UPDATE DIM'S AND NOTES	01/16/18	S.LI

DESCRIPTION	MATERIAL	FINISH
BODY	BRASS	NICKEL PLATE
FERRULE	BRASS	NICKEL PLATE
SLEEVE	BRASS	NICKEL PLATE
CENTER PIN	BRASS	GOLD PLATE
INSULATOR	PTFE	--
GASKET	MVQ	--

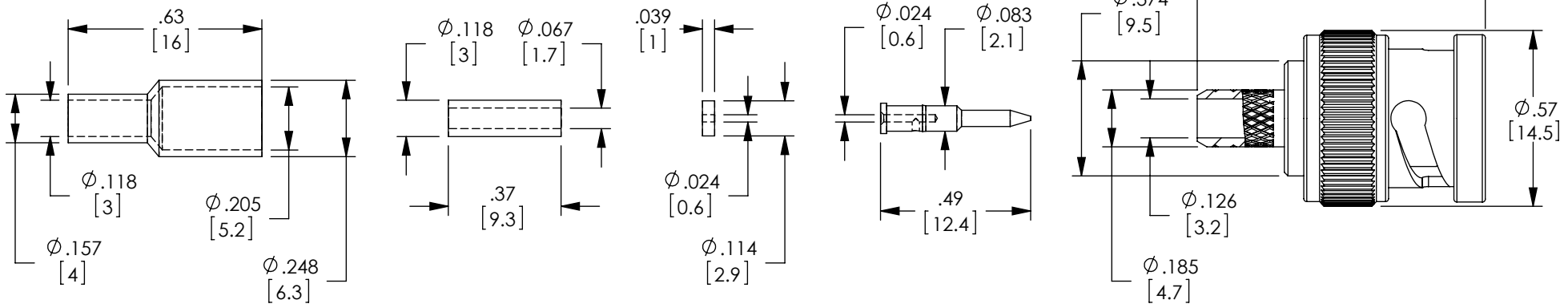

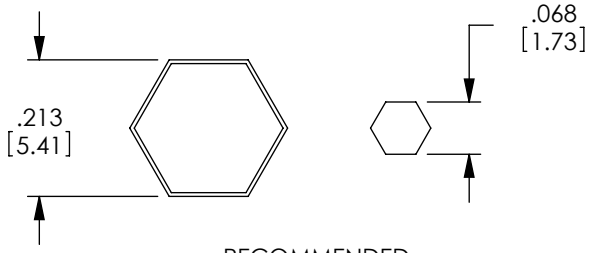

RECOMMENDED FERRULE & PIN CRIMP SIZES

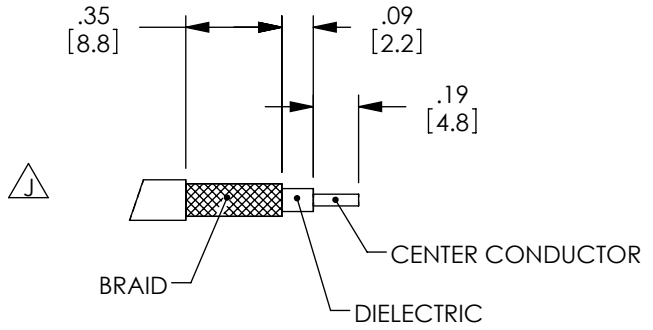

CABLE STRIPPING DIMENSIONS

NOTES:

MISCELLANEOUS:

IMPEDANCE: 50Ω
INDIVIDUALLY PACKAGE EACH ASSEMBLY UTILIZING APPROPRIATE SIZED BAG.
APPLICATIONS: RG174, RG188, RG316
ALL DIMENSIONS ARE FOR REFERENCE ONLY.

REGULATORY COMPLIANCE:
CE2011/65/EU(RoHS DIRECTIVE)

UNLESS OTHERWISE SPECIFIED,
DIMENSIONS ARE IN INCHES [mm]
OVERALL CABLE LENGTH TOLERANCE:
≤12 [305] = +1 [25] / -0
>12 [305] ≤60 [1524] = +2 [51] / -0
>60 [1524] ≤120 [3048] = +4 [102] / -0
>120 [3048] ≤300 [7620] = +6 [152] / -0
>300 [7620] = +5% / -0%
ALL OTHER DIMENSIONAL TOLERANCES:
.X = ± .2 [5.08]
.XX = ± .02 [.51]
.XXX = ±.005 [.13]
PROJECTION

APPROVALS	DATE
DRAWN BY C.MCCORMICK	05/02/2001
CHECKED BY D.PARHAM	05/03/2001
APPROVED BY R.CARRICK	05/04/2001

CONFIGURATION DETAILS OF UNDIMENSIONED FEATURES MAY VARY

COLOR VARIATIONS MAY OCCUR

L-COM Global Connectivity
50 HIGH STREET
NORTH ANDOVER, MA
01845

CATEGORY
COAXIAL

PRODUCT DESCRIPTION
50 OHM STRAIGHT BNC PLUG, CRIMP

SIZE	FSCM NO.	DWG. NO.	REV.
A	43321	BAC836B-74	J

SCALE: NONE | CAD FILE: BAC836B-74.SLDDRW | SHEET 1 OF 1