CUSTOMER NAME	
CUSTOMER Part No.	

DATE	REV	DESCRIPTION	BY
2019.08.08	A/0	NEW	LJW

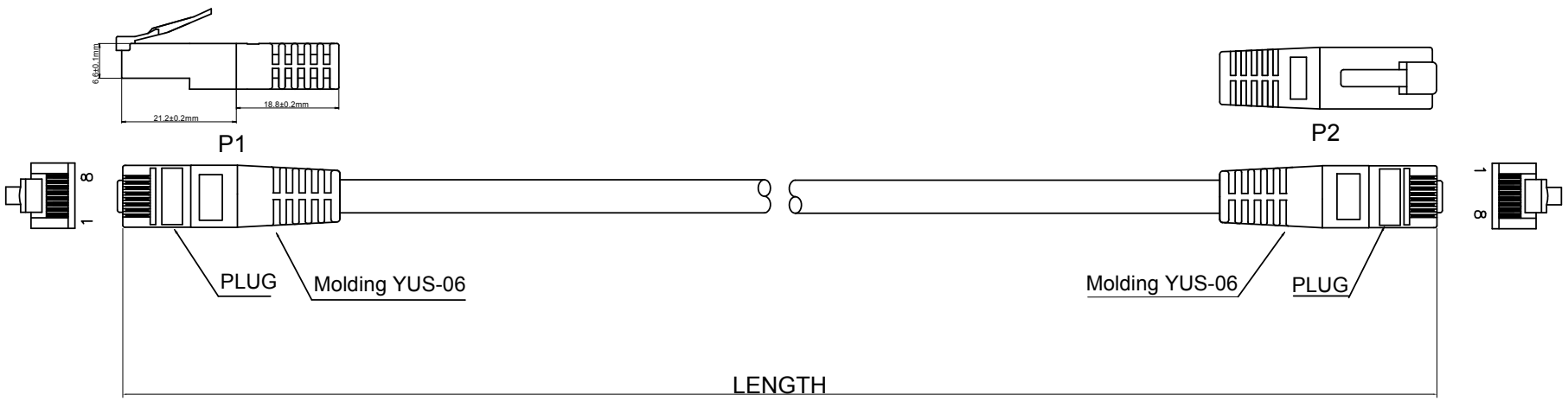

Marking: **roline UTP CAT.5E PATCH ISO/IEC 11801 & EN 50288 & ANSI/TIA-568-C.2 ▲26AWGX4P TYPE CMX(UL) c(UL)**
<FP0571> **CMH E164469-XX**

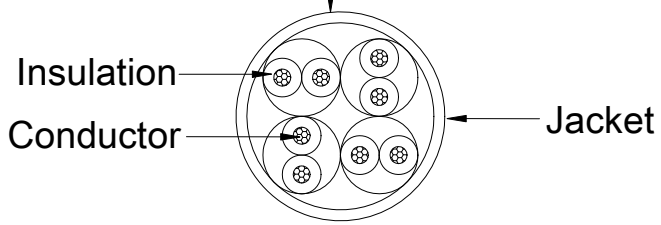

Minimum Bending Radius:≥45mm

Conductor		Bare Copper 26AWG
Insulation		Thickness:MIN at any point:0.14mm MAX AVG:0.15mm Diameter:0.76±0.06mm
Jacket	PVC	Thickness:MIN at any point:0.65mm MAX AVG:0.70mm Diameter:5.3±0.2mm
Wire	CAT 5E UTP 26AWGX4P	
Plug	YUS-06 8P8C 50U"	
Color	YY	
Length	XX	

PINOUT		
P1(T568B)	P2(T568B)	WIRE
1	1	WHT/ORG
2	2	ORG
3	3	WHT/GRN
6	6	GRN
4	4	BLU
5	5	WHT/BLU
7	7	WHT/BRN
8	8	BRN

NOTE:
1.ELECTRICAL TEST:
<1> 100% OPEN SHORT & MISS WIRE TEST.

SECOMP

Part No.			
Description	CAT 5E UTP 26AWGX4P PVC YUS-06		
UNIT	mm	APPROVAL	CHECKER	DRAWER
PAGE	1/1	副處長 2019.08.16		LJW
		覃饒		

B0-21

DATE	REV	DESCRIPTION	BY	CHKD
09/10/29	B/0	NEW	Loose	YZG

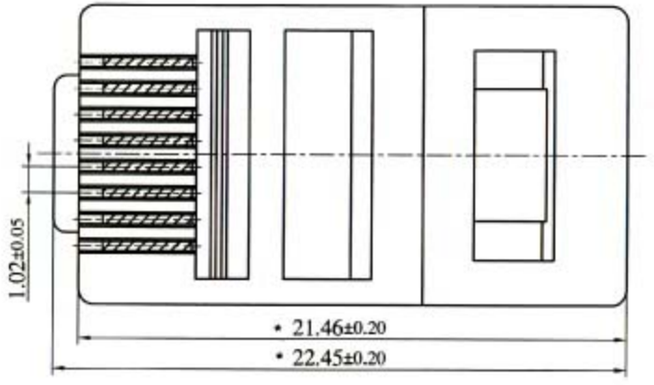

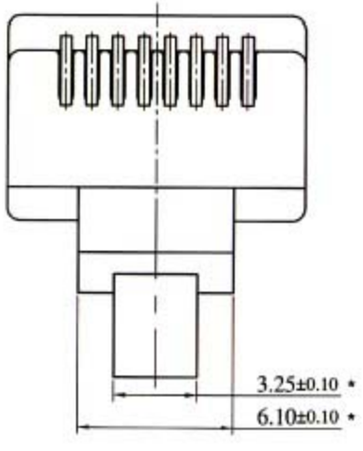

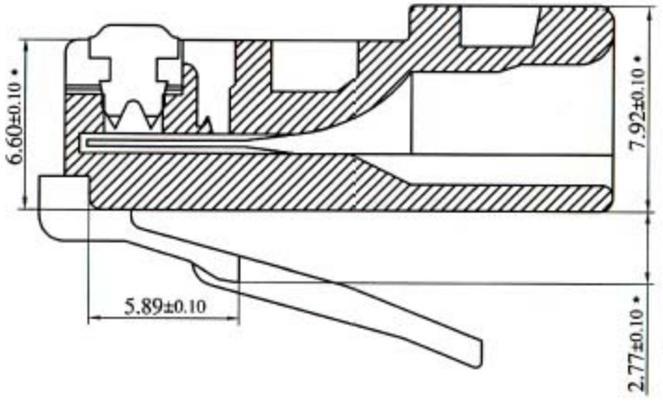

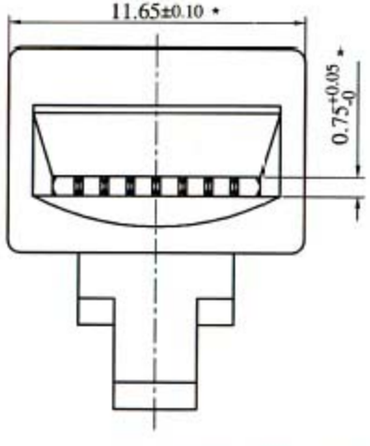

标*号者为重点检验尺寸

Unless specified on the drawing, tolerances are per the follows:
.x ± 1
.xx ± 0.2
.xxx ± 0.05
3RD

SECOMP

本厂品號		ITEM			
供應商		DRAW	Loose	DATE	09/10/29
SCALE		CHECKER		DATE	10/29
	MM	APPROVAL		DATE	

ITEM NO.	Description	Description	公差(單位:MM)
21.15.0525C	ROLINE Patchcable Cat.5e, UTP, black, 0.5m	LAN PATCH C5E UTP(W/O Cross) 26AWG 4P PVC CMX/CMH Molding BK012 0.5M	±15MM
21.15.0535C	ROLINE Patchcable Cat. 5e, UTP, black, 1m	LAN PATCH C5E UTP(W/O Cross) 26AWG 4P PVC CMX/CMH Molding BK012 1M	±15MM
21.15.0545C	ROLINE Patchcable Cat. 5e, UTP, black, 2m	LAN PATCH C5E UTP(W/O Cross) 26AWG 4P PVC CMX/CMH Molding BK012 2M	±15MM
21.15.0555C	ROLINE Patchcable Cat. 5e, UTP, black, 3m	LAN PATCH C5E UTP(W/O Cross) 26AWG 4P PVC CMX/CMH Molding BK012 3M	+15/-20MM
21.15.0565C	ROLINE Patchcable Cat. 5e, UTP, black, 5m	LAN PATCH C5E UTP(W/O Cross) 26AWG 4P PVC CMX/CMH Molding BK012 5M	±20MM
21.15.0425C	ROLINE UTP Cable Cat.5e,black,10m	LAN PATCH C5E UTP(W/O Cross) 26AWG 4P PVC CMX/CMH Molding BK012 10M	+40/-20MM
21.15.0435C	ROLINE UTP Cable Cat.5e,black,15m	LAN PATCH CAT.5E UTP(W/O Cross) 26AWG 4P PVC CMX/CMH Molding BK012 15M	+50/-20MM
21.15.0445C	ROLINE UTP Cable Cat.5e,black,20m	LAN PATCH CAT.5E UTP(W/O Cross) 26AWG 4P PVC CMX/CMH Molding BK012 20M	+60/-20MM
21.15.0524C	ROLINE Patchcable Cat. 5e, UTP, blue, 0.5m	LAN PATCH CAT.5E UTP(W/O Cross) 26AWG 4P PVC CMX/CMH Molding BU608 0.5M	±15MM
21.15.0534C	ROLINE Patchcable Cat. 5e, UTP, blue, 1m	LAN PATCH C5E UTP(W/O Cross) 26AWG 4P PVC CMX/CMH Molding BU608 1M	±15MM
21.15.0544C	ROLINE Patchcable Cat.5e, UTP, blue, 2m	LAN PATCH CAT.5E UTP(W/O Cross) 26AWG 4P PVC CMX/CMH Molding BU608 2M	±15MM
21.15.0554C	ROLINE Patchcable Cat. 5e, UTP, blue, 3m	LAN PATCH C5E UTP(W/O Cross) 26AWG 4P PVC CMX/CMH Molding BU608 3M	+15/-20MM
21.15.0564C	ROLINE Patchcable Cat. 5e, UTP, blue, 5m	LAN PATCH C5E UTP(W/O Cross) 26AWG 4P PVC CMX/CMH Molding BU608 5M	±20MM
21.15.0424C	ROLINE UTP Cable Cat.5e,blue,10m	LAN PATCH CAT.5E UTP(W/O Cross) 26AWG 4P PVC CMX/CMH Molding BU608 10M	+40/-20MM
21.15.0434C	ROLINE UTP Cable Cat.5e, blue, 15m	LAN PATCH C5E UTP(W/O Cross) 26AWG 4P PVC CMX/CMH Molding BU608 15M	+50/-20MM
21.15.0444C	ROLINE UTP Cable Cat.5e,blue,20m	LAN PATCH CAT.5E UTP(W/O Cross) 26AWG 4P PVC CMX/CMH Molding BU608 20M	+60/-20MM
21.15.0523C	ROLINE Patchcable Cat. 5e, UTP, green, 0.5m	LAN PATCH CAT.5E UTP(W/O Cross) 26AWG 4P PVC CMX/CMH Molding GN509 0.5M	±15MM
21.15.0533C	ROLINE Patchcable Cat. 5e, UTP, green, 1m	LAN PATCH CAT.5E UTP(W/O Cross) 26AWG 4P PVC CMX/CMH Molding GN509 1M	±15MM
21.15.0543C	ROLINE Patchcable Cat. 5e, UTP, green, 2m	LAN PATCH C5E UTP(W/O Cross) 26AWG 4P PVC CMX/CMH Molding GN509 2M	±15MM
21.15.0553C	ROLINE Patchcable Cat. 5e, UTP, green, 3m	LAN PATCH C5E UTP(W/O Cross) 26AWG 4P PVC CMX/CMH Molding GN509 3M	+15/-20MM
21.15.0563C	ROLINE Patchcable Cat. 5e, UTP, green, 5m	LAN PATCH C5E UTP(W/O Cross) 26AWG 4P PVC CMX/CMH Molding GN509 5M	±20MM
21.15.0423C	ROLINE UTP Cable Cat.5e, green, 10m	LAN PATCH C5E UTP(W/O Cross) 26AWG 4P PVC CMX/CMH Molding GN509 10M	+40/-20MM
21.15.0433C	ROLINE UTP Cable Cat.5e,green,15m	LAN PATCH C5E UTP(W/O Cross) 26AWG 4P PVC CMX/CMH Molding GN509 15M	+50/-20MM
21.15.0443C	ROLINE UTP Cable Cat.5e,green,20m	LAN PATCH C5E UTP(W/O Cross) 26AWG 4P PVC CMX/CMH Molding GN509 20M	+60/-20MM
21.15.0500C	ROLINE Patchcable Cat. 5e, UTP, grey, 0.5m	LAN PATCH C5E UTP(W/O Cross) 26AWG 4P PVC CMX/CMH Molding GY825 0.5M	±15MM
21.15.0501C	ROLINE Patchcable Cat.5e, UTP, grey, 1m	LAN PATCH C5E UTP(W/O Cross) 26AWG 4P PVC CMX/CMH Molding GY825 1M	±15MM
21.15.0502C	ROLINE Patchcable Cat. 5e, UTP, grey, 2m	LAN PATCH C5E UTP(W/O Cross) 26AWG 4P PVC CMX/CMH Molding GY825 2M	±15MM
21.15.0603C	ROLINE Patchcable Cat.5e,UTP,crosswire,grey,3m	LAN PATCH C5E UTP(W/O Cross) 26AWG 4P PVC CMX/CMH Molding GY825 3M	+15/-20MM
21.15.0503C	ROLINE Patchcable Cat. 5e, UTP, grey, 3m	LAN PATCH CAT.5E UTP(W/O Cross) 26AWG 4P PVC CMX/CMH Molding GY825 3M	+15/-20MM
21.15.0505C	ROLINE Patchcable Cat. 5e, UTP, grey, 5m	LAN PATCH CAT.5E UTP(W/O Cross) 26AWG 4P PVC CMX/CMH Molding GY825 5M	±20MM
21.15.0507C	ROLINE Patchcable Cat. 5e, UTP, grey, 7m	LAN PATCH CAT.5E UTP(W/O Cross) 26AWG 4P PVC CMX/CMH Molding GY825 7M	+40/-20MM
21.15.0510C	ROLINE Patchcable Cat.5e, UTP, 1:1, grey, 10m	LAN PATCH C5E UTP(W/O Cross) 26AWG 4P PVC CMX/CMH Molding GY825 10M	+40/-20MM
21.15.0515C	ROLINE Patchcable Cat. 5e, UTP, 1:1, grey, 15m	LAN PATCH C5E UTP(W/O Cross) 26AWG 4P PVC CMX/CMH Molding GY825 15M	+50/-20MM
21.15.0519C	ROLINE Patchcable Cat. 5e, UTP, 1:1, grey, 20m	LAN PATCH CAT.5E UTP(W/O Cross) 26AWG 4P PVC CMX/CMH Molding GY825 20M	+60/-20MM
21.15.0521C	ROLINE Patchcable Cat. 5e, UTP, red, 0.5m	LAN PATCH CAT.5E UTP(W/O Cross) 26AWG 4P PVC CMX/CMH Molding RD210 0.5M	±15MM
21.15.0531C	ROLINE Patchcable Cat.5e, UTP, red, 1m	LAN PATCH C5E UTP(W/O Cross) 26AWG 4P PVC CMX/CMH Molding RD210 1M	±15MM
21.15.0541C	ROLINE Patchcable Cat. 5e, UTP, red, 2m	LAN PATCH C5E UTP(W/O Cross) 26AWG 4P PVC CMX/CMH Molding RD210 2M	±15MM
21.15.0551C	ROLINE Patchcable Cat. 5e, UTP, red, 3m	LAN PATCH CAT.5E UTP(W/O Cross) 26AWG 4P PVC CMX/CMH Molding RD210 3M	+15/-20MM
21.15.0561C	ROLINE Patchcable Cat. 5e, UTP, red, 5m	LAN PATCH C5E UTP(W/O Cross) 26AWG 4P PVC CMX/CMH Molding RD210 5M	±20MM
21.15.0421C	ROLINE UTP Cable Cat.5e,red,10m	LAN PATCH C5E UTP(W/O Cross) 26AWG 4P PVC CMX/CMH Molding RD210 10M	+40/-20MM
21.15.0431C	ROLINE UTP Cable Cat.5e, red, 15m	LAN PATCH CAT.5E UTP(W/O Cross) 26AWG 4P PVC CMX/CMH Molding RD210 15M	+50/-20MM
21.15.0441C	ROLINE UTP Cable Cat.5e, red, 20m	LAN PATCH C5E UTP(W/O Cross) 26AWG 4P PVC CMX/CMH Molding RD210 20M	+60/-20MM
21.15.0522C	ROLINE Patchcable Cat. 5e, UTP, yellow, 0.5m	LAN PATCH C5E UTP(W/O Cross) 26AWG 4P PVC CMX/CMH Molding YE406 0.5M	±15MM
21.15.0532C	ROLINE Patchcable Cat. 5e, UTP, yellow, 1m	LAN PATCH C5E UTP(W/O Cross) 26AWG 4P PVC CMX/CMH Molding YE406 1M	±15MM
21.15.0542C	ROLINE Patchcable Cat. 5e, UTP, yellow, 2m	LAN PATCH C5E UTP(W/O Cross) 26AWG 4P PVC CMX/CMH Molding YE406 2M	±15MM
21.15.0552C	ROLINE Patchcable Cat. 5e, UTP, yellow, 3m	LAN PATCH CAT.5E UTP(W/O Cross) 26AWG 4P PVC CMX/CMH Molding YE406 3M	+15/-20MM
21.15.0562C	ROLINE Patchcable Cat. 5e, UTP, yellow, 5m	LAN PATCH C5E UTP(W/O Cross) 26AWG 4P PVC CMX/CMH Molding YE406 5M	±20MM
21.15.0422C	ROLINE UTP Cable Cat.5e,yellow,10m	LAN PATCH C5E UTP(W/O Cross) 26AWG 4P PVC CMX/CMH Molding YE406 10M	+40/-20MM
21.15.0432C	ROLINE UTP Cable Cat.5e,yellow,15m	LAN PATCH C5E UTP(W/O Cross) 26AWG 4P PVC CMX/CMH Molding YE406 15M	+50/-20MM
21.15.0442C	ROLINE UTP Cable Cat.5e, yellow, 20m	LAN PATCH CAT.5E UTP(W/O Cross) 26AWG 4P PVC CMX/CMH Molding YE406 20M	+60/-20MM