

Model Number

OBR15M-R200-2EP-IO-V1

Retroreflective sensor with polarization filter

with 4-pin, M12 x 1 connector

Features

- Medium design with versatile mounting options
- Extended temperature range -40°C ... 60°C
- High degree of protection IP69K
- IO-link interface for service and process data

Product information

The optical sensors in the series are the first devices to offer an end-to-end solution in a medium-sized standard design—from the thru-beam sensor through to the measuring distance sensor. As a result of this design, the sensors are able to perform practically all standard automation tasks.
The entire series enables sensors to communicate via IO-Link.
The DuraBeam laser sensors are durable and can be used in the same way as a standard sensor.
Multi Pixel Technology (MPT) ensures that the standard sensors are flexible and
can be adapted to the application environment.

Dimensions

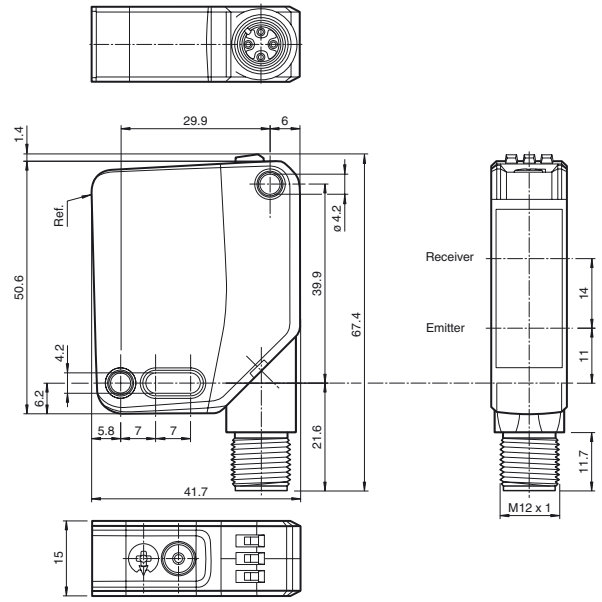

Electrical connection

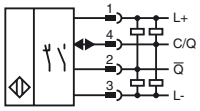

Pinout

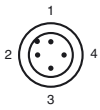

Wire colors in accordance with EN 60947-5-2

1	BN	(brown)
2	WH	(white)
3	BU	(blue)
4	BK	(black)

Indicators/operating means

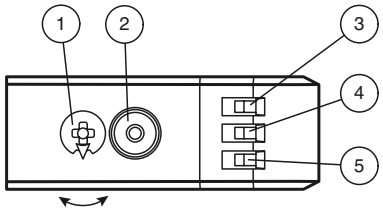

1	Sensitivity adjustment	
2	Light-on / dark-on changeover switch	
3	Operating indicator / dark on	GN
4	Signal indicator	YE
5	Operating indicator / light on	GN

Release date: 2019-02-11 10:56 Date of issue: 2019-10-31 295670-100012_eng.xml

Technical data

General specifications		
Effective detection range		0 ... 15 m
Reflector distance		0.02 ... 15 m
Threshold detection range		18.5 m
Reference target		H85-2 reflector
Light source		LED
Light type		modulated visible red light
LED risk group labelling		exempt group
Polarization filter		yes
Diameter of the light spot		approx. 520 mm at a distance of 15 m
Angle of divergence		2 °
Ambient light limit		EN 60947-5-2 : 60000 Lux
Functional safety related parameters		
$MTTF_d$		724 a
Mission Time (T_M)		20 a
Diagnostic Coverage (DC)		0 %
Indicators/operating means		
Operation indicator		LED green: constantly on - power on flashing (4Hz) - short circuit flashing with short break (1 Hz) - IO-Link mode
Function indicator		Yellow LED: Permanently lit - light path clear Permanently off - object detected Flashing (4 Hz) - insufficient operating reserve
Control elements		Light-on/dark-on changeover switch
Control elements		sensitivity adjustment
Electrical specifications		
Operating voltage	U_B	10 ... 30 V DC
Ripple		max. 10 %
No-load supply current	I_0	< 18 mA at 24 V Operating voltage
Protection class		III
Interface		
Interface type		IO-Link (via C/Q = pin 4)
Device profile		Identification and diagnosis Smart Sensor type 2.4
Transfer rate		COM 2 (38.4 kBaud)
IO-Link Revision		1.1
Min. cycle time		2.3 ms
Process data witdh		Process data input 2 Bit Process data output 2 Bit
SIO mode support		yes
Device ID		0x111201 (1118721)
Compatible master port type		A
Output		
Switching type		The switching type of the sensor is adjustable. The default setting is: C/Q - Pin4: NPN normally open / dark-on, PNP normally closed / light-on, IO-Link /Q - Pin2: NPN normally closed / light-on, PNP normally open / dark-on
Signal output		2 push-pull (4 in 1)outputs, short-circuit protected, reverse polarity protected, overvoltage protected
Switching voltage		max. 30 V DC
Switching current		max. 100 mA , resistive load
Usage category		DC-12 and DC-13
Voltage drop	U_d	≤ 1.5 V DC
Switching frequency	f	1000 Hz
Response time		0.5 ms
Conformity		
Communication interface		IEC 61131-9
Product standard		EN 60947-5-2
Ambient conditions		
Ambient temperature		-40 ... 60 °C (-40 ... 140 °F)
Storage temperature		-40 ... 70 °C (-40 ... 158 °F)
Mechanical specifications		
Housing width		15 mm
Housing height		50.6 mm
Housing depth		41.7 mm
Degree of protection		IP67 / IP69 / IP69K
Connection		4-pin, M12 x 1 connector, 90° rotatable
Material		
Housing		PC (Polycarbonate)
Optical face		PMMA
Mass		approx. 37 g

Accessories

IO-Link-Master02-USB
IO-Link master, supply via USB port or separate power supply, LED indicators, M12 plug for sensor connection

OMH-MLV12-HWK
Mounting bracket for series MLV12 sensors

OMH-R200-01
Mounting aid for round steel ø 12 mm or sheet 1.5 mm ... 3 mm

OMH-R20x-Quick-Mount
Quick mounting accessory

OMH-MLV12-HWG
Mounting bracket for series MLV12 sensors

REF-H85-2
Reflector, rectangular 84.5 mm x 84.5 mm, mounting holes

REF-C110-2
Reflector, round ø 84 mm, central mounting hole

REF-H50
Reflector, rectangular 51 mm x 61 mm, mounting holes, fixing strap

REF-VR10
Reflector, rectangular 60 mm x 19 mm, mounting holes

OFR-100/100
Reflective tape 100 mm x 100 mm

V1-G-2M-PUR
Female cordset, M12, 4-pin, PUR cable

V1-W-2M-PUR
Female cordset, M12, 4-pin, PUR cable

Other suitable accessories can be found at www.pepperl-fuchs.com

Release date: 2019-02-11 10:56 Date of issue: 2019-10-31 295670-100012_eng.xml

Approvals and certificates	
UL approval	E87056 , cULus Listed , class 2 power supply , type rating 1
CCC approval	CCC approval / marking not required for products rated ≤36 V

Curves/Diagrams

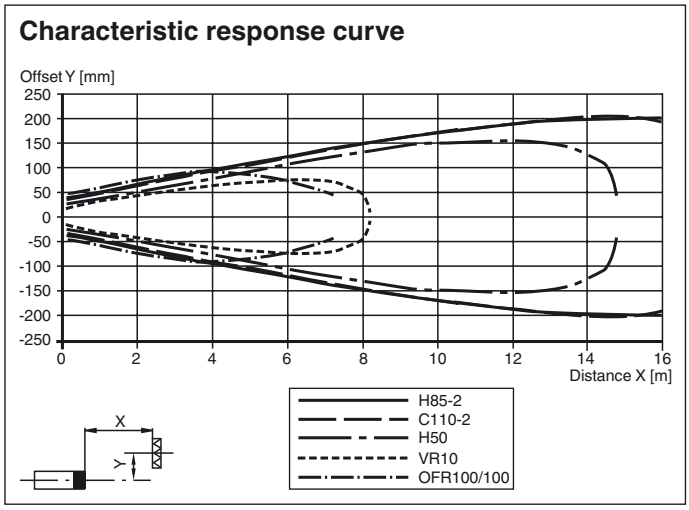

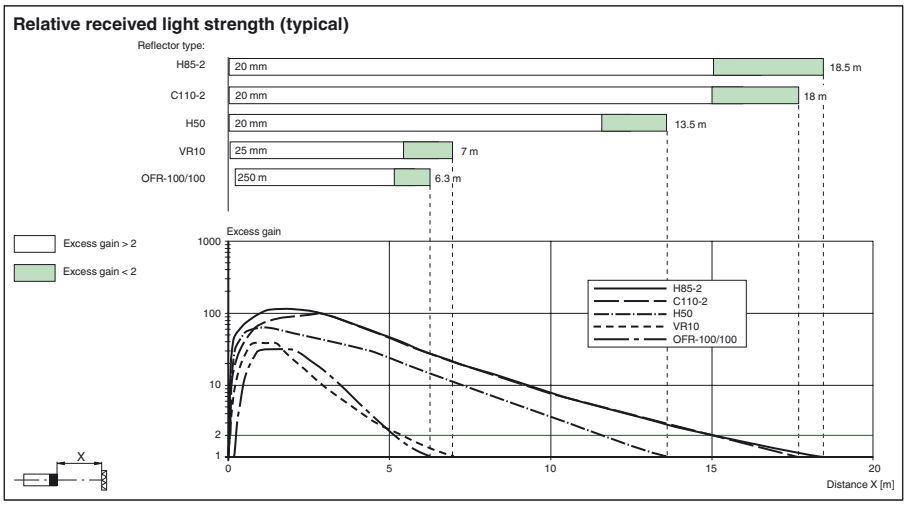

Functions and Operation

To unlock the adjustment functions turn the sensing range /sensitivity adjuster for more than 180 degrees.

Sensing Range / Sensitivity

Turn sensing range / sensitivity adjuster clockwise to increase sensing range / sensitivity.

Turn sensing range / sensitivity adjuster counter clockwise to decrease sensing range / sensitivity.

If the end of the adjustment range is reached, the signal indicator starts flashing with 8 Hz.

Light-on / Dark-on Configuration

Press the light-on / dark-on changeover switch for more than 1 second (less than 4 seconds). The light-on / dark-on mode changes and the operating indicators are activated accordingly.

If you press the light-on / dark-on changeover switch for more than 4 seconds, the light-on /dark-on mode changes back to the original setting. On release of the light-on / dark-on changeover switch the current state is activated.

Restore Factory Settings

Press the light-on / dark-on changeover switch for more than 10 seconds (less than 30 seconds) until all LEDs turn off. On release of the light-on / dark-on changeover switch the signal indicator turns on. After 5 seconds the sensor resumes operation with factory default settings.

After 5 minutes of inactivity the sensing range / sensitivity adjustment is locked. In order to reactivate the sensing range / sensitivity adjustment, turn the sensing range /sensitivity adjuster for more than 180 degrees.

Release date: 2019-02-11 10:56 Date of issue: 2019-10-31 295670-100012_eng.xml