MURR ELEKTRONIK
stay connected

M12 Power L-coded female receptacle front mount

wires PUR 5x1.5 0,5m

Flange female
M12, 5-pole
L-coded
Front mounting
with multi-strand wire

The resistance to aggressive media should be individually tested for your application. Further details on request. Further cable lengths on request.

Link to Product

Illustration



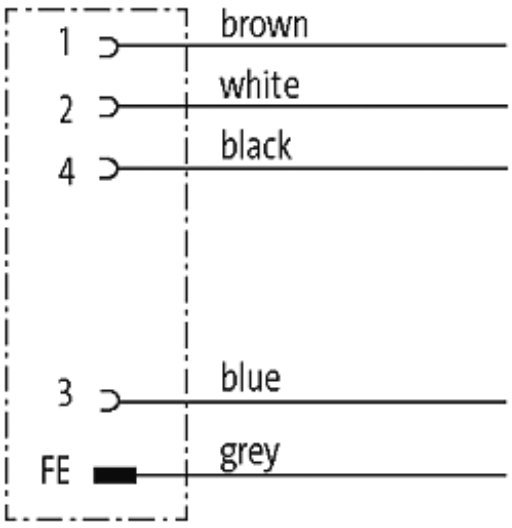

The information in this brochure has been compiled with the utmost care.
Liability for the correctness completeness and topicality of the information is restricted to gross negligence. Version: 07/17

MURR ELEKTRONIK
stay connected

Female

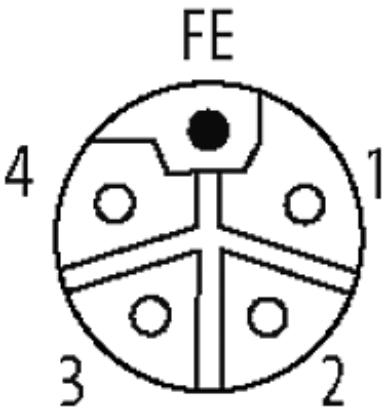

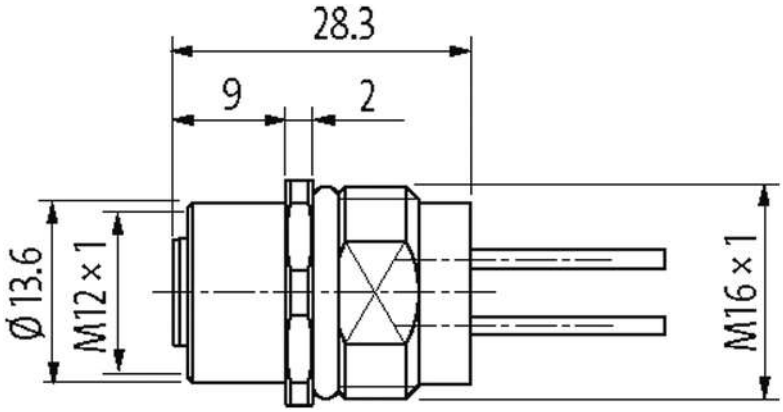

Product may differ from Image

Form	
Form	P4291
Cables	
Cable number	980
No./diameter of wires	5 × 1.5 mm²
Wire isolation	PUR
Bend radius (fixed)	7.5 × outer Ø
Bend radius (moving)	10 × outer Ø
Temperature range (fixed)	-40...+90 °C
Temperature range (mobile)	-25...+90 °C
Shielded	no
Technical Data	
Operating voltage	max. 63 V AC/DC
Rated surge voltage	1.5 kV
Operating current per contact	max. 16 A
Material group	IEC 60664-1, category I
Coding	L-coded

The information in this brochure has been compiled with the utmost care.
Liability for the correctness completeness and topicality of the information is restricted to gross negligence. Version: 07/17

Locking of ports	Screw thread M12 × 1 mm (recommended torque 0.6 Nm) self-securing
Compression gland	Flange (SW17)
Protection	IP65 and IP67 when plugged and screwed down (EN 60529)
Locking material	Brass, nickel plated
suitable for corrugated tube (internal Ø)	without
Housing	Brass, nickel plated
General data	
Pollution Degree	3
Mounting set	Screw thread M16 × 1.5 mm (mounting nut)
Temperature range	-25...+85 °C, depending on cable quality
Material (gasket)	FKM
Commercial data	
country of origin	DE
customs tariff number	85444290
EAN	4048879636230
eClass	27279221
minimum order quantity	1

The information in this brochure has been compiled with the utmost care.
Liability for the correctness completeness and topicality of the information is restricted to gross negligence. Version: 07/17