# Product Data Sheet RG125-19/14N/2

ebmpapst

The engineer's choice



**RG125-19/14N/2**

**INDEX**

**1 General ..... 3**

**2 Mechanics ..... 3**

2.1 General ..... 3
2.2 Connections ..... 3

**3 Operating Data ..... 5**

3.1 Electrical Operating Data ..... 5
3.2 Operating Data - Electrical Interface - Output ..... 6
3.3 Electrical Features ..... 7
3.4 Aerodynamics ..... 8
3.5 Sound Data ..... 9

**4 Environment ..... 9**

4.1 General ..... 9
4.2 Climatic Requirements ..... 9

**5 Safety ..... 10**

5.1 Electrical Safety ..... 10
5.2 Approval Tests ..... 10

**6 Reliability ..... 10**

6.1 General ..... 10

## 1 General

| | | |
|---|---|---|
| Fan type | Blower | |
| Rotating direction looking at rotor | Clockwise | |
| Airflow direction | Air in axially, Air out radially | |
| Bearing system | Ball bearing | |
| Mounting position - shaft | Any | |

## 2 Mechanics

### 2.1 General

| | | |
|---|---|---|
| Width | 180,0 mm | |
| Height | 180,0 mm | |
| Depth | 40,0 mm | |
| Mass | 0,750 kg | |
| Housing material | Mixed | |
| Impeller material | Mixed | |
| Max. torque when mounted across both mounting flanges; Metal flange on mounting plate<br>Screw size | Wire outlet corner: 70 Ncm<br>Remaining corners: 70 Ncm<br>ISO 4762 - M4 degreased, without an additional brace and without washer | |

### 2.2 Connections

| | | |
|---|---|---|
| Electrical connection | Wires | |
| Lead wire length<br>Tolerance | L = 310 mm<br>+- 10,0 mm | |
| Tube length<br>Tolerance | S = 20 mm<br>+- 10,0 mm | |
| Wire size (AWG) | 22 | |
| Insulation diameter | 1,70 mm | |



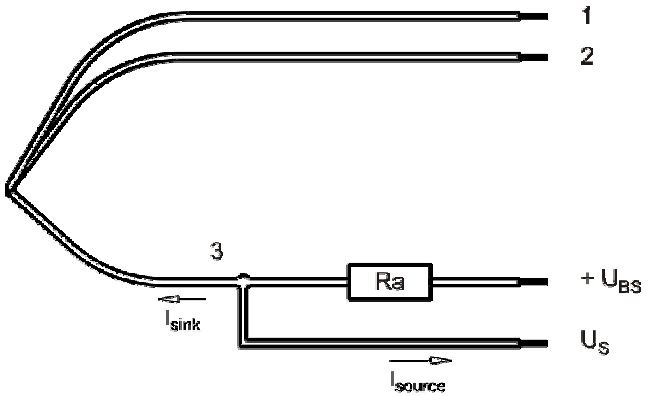


| Wire | Color | Operation |
|---|---|---|
| 1 | red | + UB |
| 2 | black | - GND |
| 3 | yellow | Tacho |

The auxilliaries shown on the schematic diagram (which are required for the intended use) are not part of our delivery.

## 3 Operating Data

### 3.1 Electrical Operating Data

Measurement conditions: Normal air density = 1,2 kg/m3; Temperature 23°C +/- 3°C; Motor axis horizontal; warm-up time before measuring 5 minutes (unless otherwise specified). In the intake and outlet area should not be any solid obstruction within 0,5 m.

Δp = 0: corresp. to free air flow (see section 3.5)
I: corresp. to arithm. mean current value

| Features | Condition | Symbol | Values | | |
|---|---|---|---|---|---|
| Voltage range | | U | 12,0 V | | 28,0 V |
| Nominal voltage | | $U_N$ | | 24,0 V | |
| Power consumption | Δp = 0 | P | 1,1 W | 4,9 W | 6,7 W |
| Tolerance | 0010 | | +- 17,5 % | +- 12,5 % | +- 15,0 % |
| Current consumption | Δp = 0 | I | 94 mA | 203 mA | 240 mA |
| Tolerance | 0010 | | +- 17,5 % | +- 12,5 % | +- 15,0 % |
| Speed | Δp = 0 | n | 1.365 1/min | 2.550 1/min | 2.840 1/min |
| Tolerance | 0010 | | +- 12,5 % | +- 7,5 % | +- 10,0 % |
| Starting current consumption | | | | < 900 mA | |

### 3.2 Operating Data - Electrical Interface - Output

| | |
|---|---|
| Tacho type | /2 (open collector) |

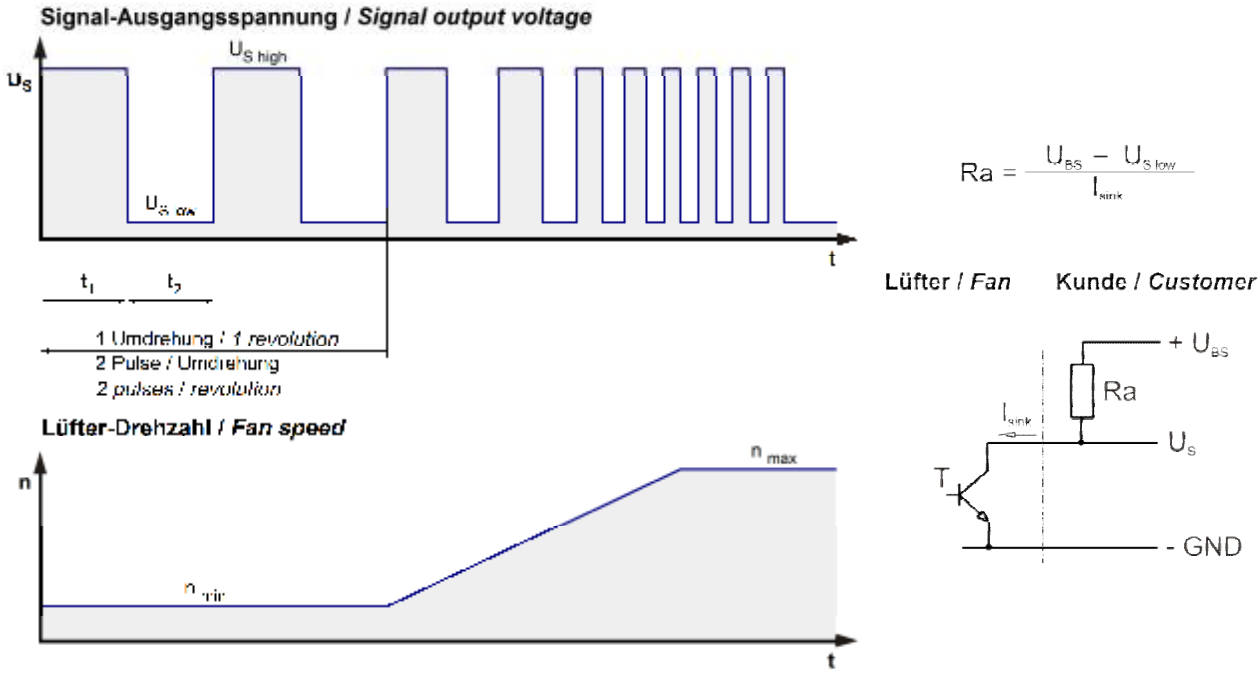


| Features | | Note | Values |
|---|---|---|---|
| Tacho operating voltage | $U_{BS}$ | | Min.: 4 V Max.: 30 V |
| Tacho signal Low | $U_{S\ low}$ | I sink: 2 mA | <= 0,4 V |
| Tacho signal High | $U_{S\ high}$ | I source: 0 mA | 30,0 V |
| Maximum sink current | $I_{sink}$ | | <= 4 mA |
| External resistor | | External resistor Ra from UBS to US required. All voltages measured to GND. | |
| Tacho frequency | | (2 x n) / 60 | |
| Tacho isolated from motor | | No | |
| Slew rate | | | => 0,5 V/us |

n = revolutions per minute (1/min)

### 3.3 Electrical Features

| | | |
|---|---|---|
| Electronic function | None | |
| Reversed polarity protection<br>Max. residual current at $U_N$ | Rectifying diode<br>$I_F$ <= 10 mA | |
| Locked rotor protection | Auto restart | |
| Locked rotor current at $U_N$ | $I_{block}$ approx. 900 mA | |
| Clock signal at locked rotor | $t_3$ / $t_4$ typical: 0,6 s / 10 s | |

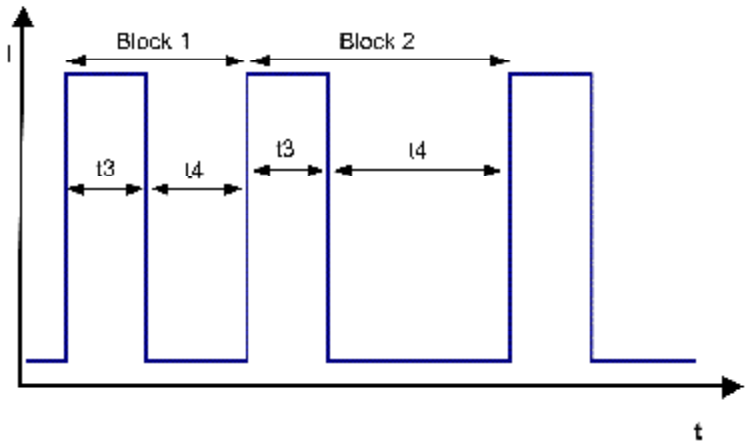


Block1: special locked rotor protection: 5 cycles t3 / t4 = 0,6 s / 1 s Block2: locked rotor protection t3 / t4 = 0,6 s / 10 s

### 3.4 Aerodynamics

| | |
|---|---|
| Measurement conditions: | Measured with a double chamber intake rig acc. to DIN EN ISO 5801.<br>Normal air density = 1,2 kg/m3; Temperature 23°C +/- 3°C;<br>In the intake and outlet area should not be any solid obstruction within 0,5 m.<br>The information is only valid under the specified test conditions and may be changed by the installation conditions. If there are deviations from the standard test conditions, the characteristic values must be checked under the installed conditions. |

a.) Operation condition:

| |
|---|
| 2.550 1/min at free air flow |

| | | |
|---|---|---|
| Max. free-air flow (Δp = 0 / $\dot{V}$ = max.) | 88,0 m3/h | |
| Max. static pressure (Δp = max. / $\dot{V}$ =0) | 180 Pa | |

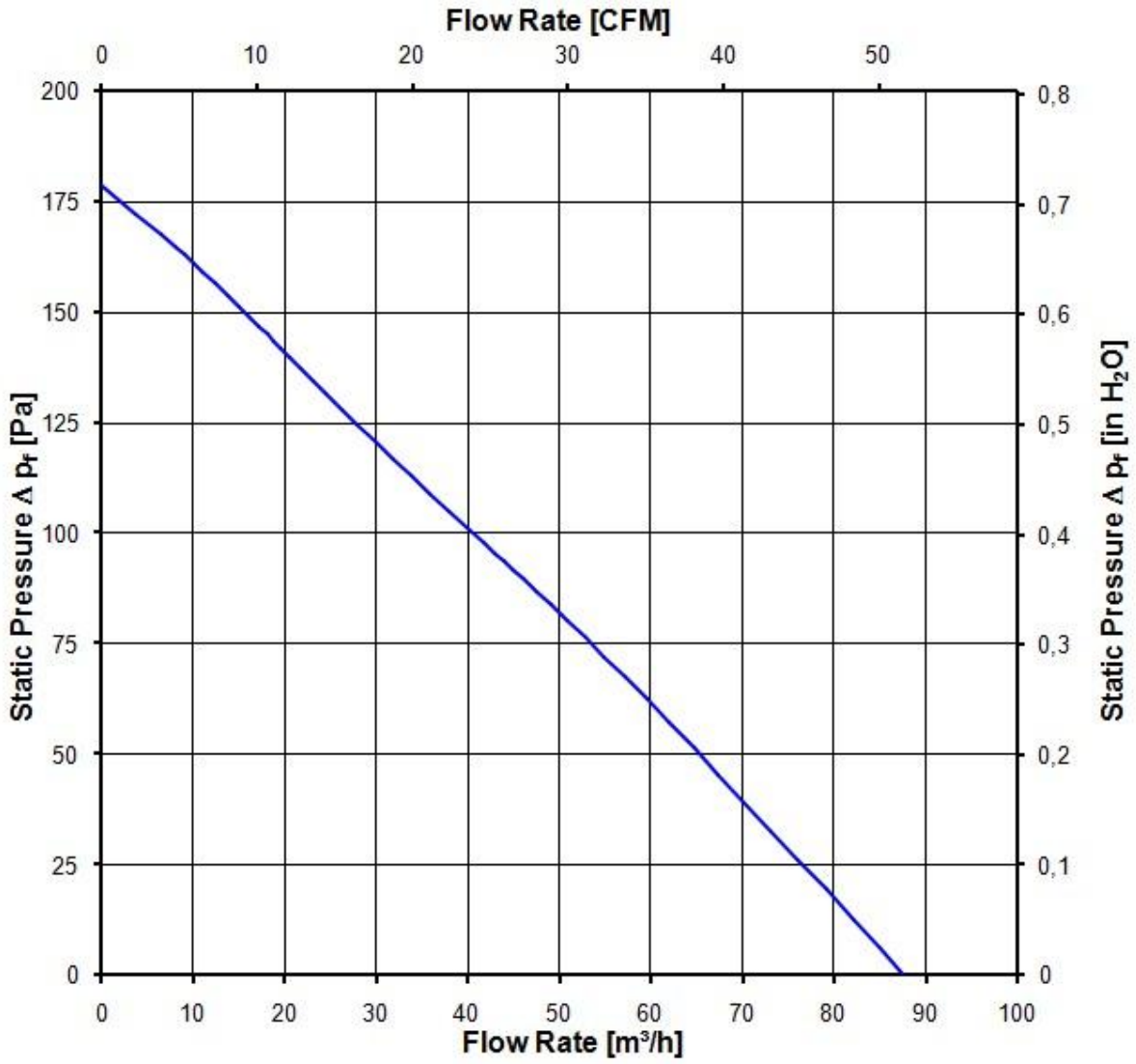

### 3.5 Sound Data

| | |
|---|---|
| Measurement conditions: | Sound pressure level: 1 meter distance between microphone and the air intake.<br>Sound power level: Acc. to DIN 45635 part 38 (ISO 10302)<br>Measured in a semianchoic chamber with a background noise level of Lp(A) < 5 dB(A)<br>For further measurement conditions see section 3.5 |

a.) Operation condition:

| |
|---|
| 2.550 1/min at free air flow |

| | | |
|---|---|---|
| Optimal operating point | 10,0 m3/h @ 144 Pa | |
| Sound power level at the optimal operating point | 5,7 bel(A) | |
| Sound pressure level at free air flow, measured in rubber bands | | |

## 4 Environment

### 4.1 General

| | | |
|---|---|---|
| Min. permitted ambient temperature TU min. | -30 °C | |
| Max. permitted ambient temperature TU max. | 75 °C | |
| Min. permitted storage temperature TL min. | -40 °C | |
| Max. permitted storage temperature TL max. | 80 °C | |

### 4.2 Climatic Requirements

| | | |
|---|---|---|
| Humidity requirements | humid heat, constant; according to DIN EN 60068-2-78, 14 days | |
| Water exposure | None | |
| Dust requirements | None | |
| Salt fog requirements | None | |

Permitted application area:
The product is intended for use in sheltered rooms with controlled temperature and controlled humidity. Directly exposure to water must be avoided.

Pollution degree 1 (according DIN EN 60664-1)
There is either no pollution or it occurs only dry, non-conductive pollution. The pollution has no negative impact.

Please require severity levels and specification parameters from the responsible development departments.

## 5 Safety

### 5.1 Electrical Safety

| | | |
|---|---|---|
| Dielectric strength<br>DIN EN 60950 (VDE 0805) and DIN EN 60335 (VDE 0700)<br>A.) Type test<br>Measuring conditions: After 48h of storage at 95% R.H. and 25°C.<br>No arcing or breakdown is allowed!<br>All connections together to ground.<br>B.) Routine test<br>Measuring conditions: At indoor climate.<br>No arcing or breakdown is allowed!<br>All connections together to ground. | 500 VAC / 1 Min.<br><br>500 VAC / 1 Sec. | |
| Isolation resistance<br>Measuring conditions: After 48h of storage at 95% R.H. and 25°C measured with U=500 VDC for 1 min. | RI > 10 MOhm | |
| Clearance / creepage distance | 1,0 mm / 1,2 mm | |
| Protection class | III | |

### 5.2 Approval Tests

| | | |
|---|---|---|
| CE | EC Declaration of Conformity | Yes |
| EAC | Eurasian Conformity | Yes |
| UL | Underwriters Laboratories | Yes / UL audited by CSA according to UL507, Electric Fans |
| VDE | Association for Electrical, Electronic and Information Technologies | Yes / Approval acc. to EN 60950 (VDE 0805) - Information technology equipment |
| CSA | Canadian Standards Association | Yes / C22.2 No. 113 Fans and Ventilators |
| CCC | China Compulsory Certification | Not applicable |

## 6 Reliability

### 6.1 General

| | | |
|---|---|---|
| Life expectancy L10 at TU = 40 °C | 62.500 h | |
| Life expectancy L10 at TU max. | 27.500 h | |
| Life expectancy L10 acc. to IPC 9591 at TU = 40 °C | 105.000 h | |

Copying of this document, and giving it to others and the use or communication of the contents thereof, are forbidden without express authority. Offenders are liable to the payment of damages. All rights are reserved in the event of the grant of a patent or the registration of a utility model or design.

Schutzvermerk nach DIN 34 beachten

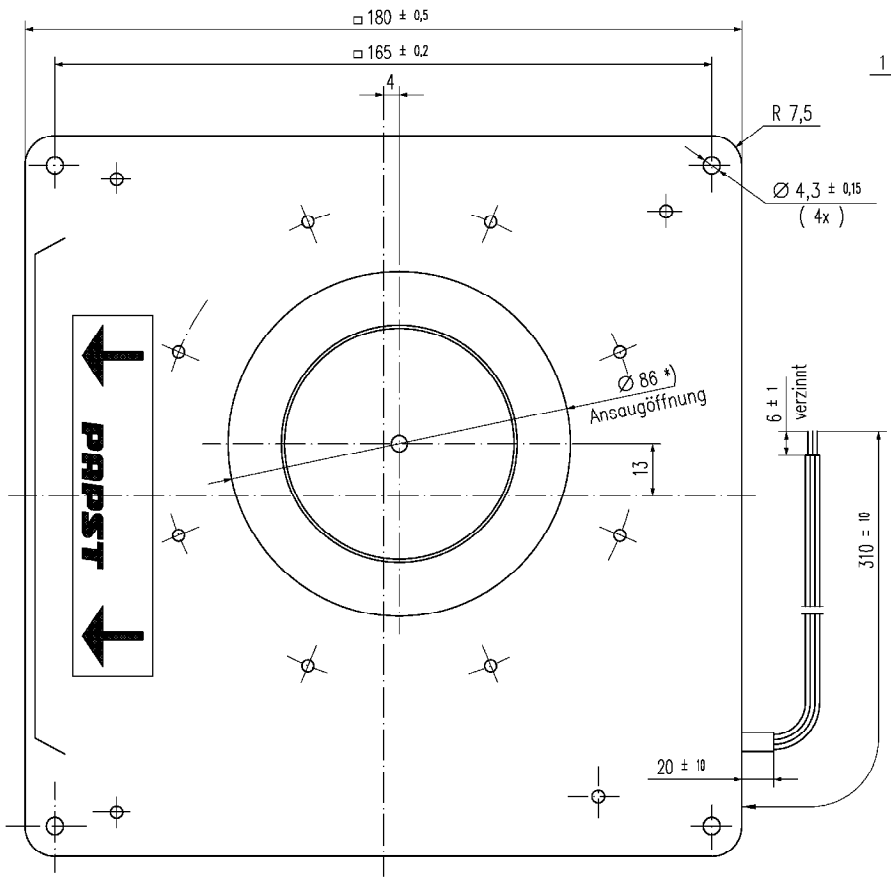


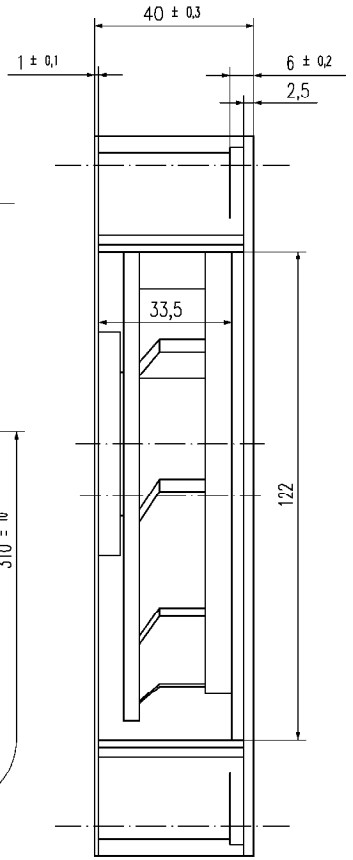


gilt für:

| | | |
|---|---|---|
| | 959 4310 131 | RG125-19/14N/17 |
| | 959 4310 132 | RG125-19/14N/2 |
| | 959 4310 133 | RG125-19/14N/2-133 |
| | 959 4310 134 | RG125-19/14N/12 |
| | 959 4310 135 | RG125-19/12N/12 |
| | 959 4310 136 | RG125-19/14N/17H-136 |
| (f) | 959 4310 137 | RG125-19/14N/2-137 |
| (g) | 959 4310 139 | RG125-19/18N/2 |

*) Öffnung für Montagewand ≥ 100mm

Axialspiel: 0 (mit Federausgleich)

Allgemeintoleranzen

ISO 2768 – m

| | | | | | Datum | Name |
|---|---|---|---|---|---|---|
| g | | | | | | |
| f | | | | Erstellt | | |
| e | | | | Geprüft | | |
| d | | | | | | |

| Index | Änd.-Nr. | Datum | Geändert von |
|---|---|---|---|

Zur Verwendung im Verteiler freigegeben von / am

PAPST

PAPST-MOTOREN GmbH & Co KG
D-78112 St.Georgen
Germany

Artikel

Maßstab

Zchg.-Nr.

Blatt

Ers.f.Zchg.:

516
210
232
235
240
082