**JUMO GmbH & Co. KG**
Delivery address: Mackenrodtstraße 14,
36039 Fulda, Germany
Postal address: 36035 Fulda, Germany
Phone: +49 661 6003-0
Fax: +49 661 6003-607
e-mail: mail@jumo.net
Internet: www.jumo.net

**JUMO Instrument Co. Ltd.**
JUMO House
Temple Bank, Riverway
Harlow, Essex CM 20 2TT, UK
Phone: +44 1279 635533
Fax: +44 1279 635262
e-mail: sales@jumo.co.uk
Internet: www.jumo.co.uk

**JUMO Process Control, Inc.**
8 Technology Boulevard
Canastota, NY 13032, USA
Phone: 315-697-JUMO
1-800-554-JUMO
Fax: 315-697-5867
e-mail: info@jumo.us
Internet: www.jumo.us



# Screw-in RTD temperature probe with terminal head form J

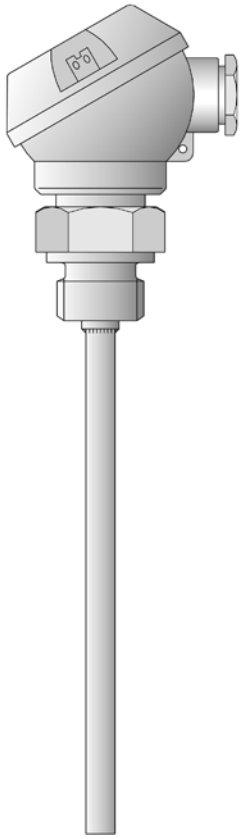

- **For temperatures from -50 to +400°C**
- **As single or double RTD temperature probes**
- **Available with transmitter**
- **Protection class IP65**

Screw-in RTD temperature probes are preferentially used for measuring temperatures in liquids and gases. A decisive selection criterion is the reliable sealing feature of this installation type with vacuum and with overpressure. The application areas are, among others, in the air conditioning technology and refrigeration engineering as well as the HVAC, kiln and apparatus engineering sector.

The measuring insert is normally fitted with a Pt100 temperature sensor according to DIN EN 60751, Class B in 2-wire circuit; versions with Pt500 or Pt1000 temperature sensors can also be supplied, as well as 3- and 4-wire circuit connections. A transmitter can be optionally integrated into the connection head.

## Technical Data

| | |
|---|---|
| **Terminal head** | Form J, die-cast aluminum, M 16x1.5; IP65, ambient temperature -40 to +100 °C<br>Caution: reduced ambient temperature range when using transmitters, Data Sheet 70.7030 |
| **Process connection** | thread, stainless steel 1.4571 |
| **Protection tube** | Stainless steel 1.4571, Ø 6 mm and Ø 8 mm |
| **Measuring insert** | Pt100 temperature sensor according to DIN EN 60751, Class B, two-wire circuit |
| **Response times** | $t_{0.5}$ = 5 sec, $t_{0.9}$ = 14 sec, in water 0.4 m/sec, 6 mm dia. |
| **Transmitter** | Analog transmitter, output 4 to 20 mA, Data sheet 70.7030 |
| **Accessories** | Sheath, Data Sheet 90.9710 (90.9721) |

**JUMO GmbH & Co. KG**
Delivery address: Mackenrodtstraße 14,
36039 Fulda, Germany
Postal address: 36035 Fulda, Germany
Phone: +49 661 6003-0
Fax: +49 661 6003-607
e-mail: mail@jumo.net
Internet: www.jumo.net

**JUMO Instrument Co. Ltd.**
JUMO House
Temple Bank, Riverway
Harlow, Essex CM 20 2TT, UK
Phone: +44 1279 635533
Fax: +44 1279 635262
e-mail: sales@jumo.co.uk
Internet: www.jumo.co.uk

**JUMO Process Control, Inc.**
8 Technology Boulevard
Canastota, NY 13032, USA
Phone: 315-697-JUMO
1-800-554-JUMO
Fax: 315-697-5867
e-mail: info@jumo.us
Internet: www.jumo.us



## Dimensions

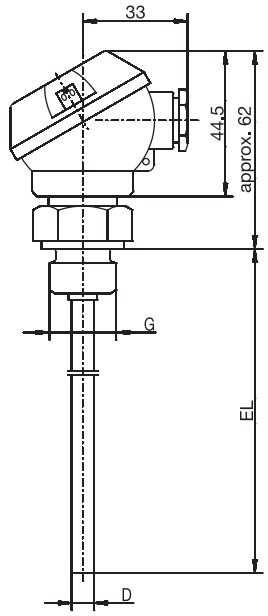


**Type 902030/10**

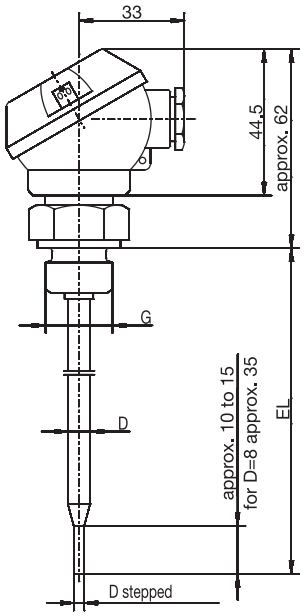


**Type 902030/11**

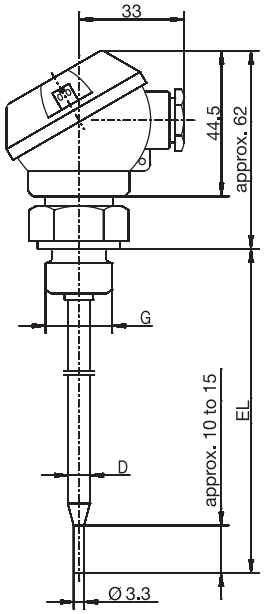


**Type 902030/31**

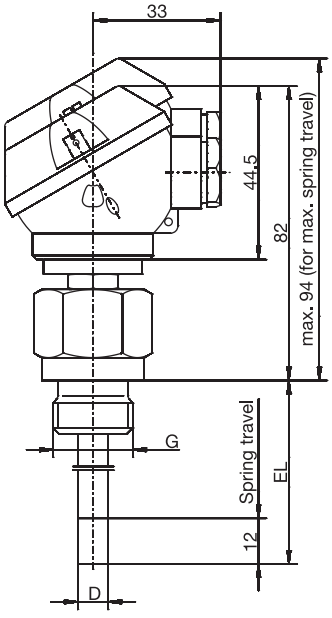


**Type 902030/80**

**JUMO GmbH & Co. KG**
Delivery address: Mackenrodtstraße 14,
36039 Fulda, Germany
Postal address: 36035 Fulda, Germany
Phone: +49 661 6003-0
Fax: +49 661 6003-607
e-mail: mail@jumo.net
Internet: www.jumo.net

**JUMO Instrument Co. Ltd.**
JUMO House
Temple Bank, Riverway
Harlow, Essex CM 20 2TT, UK
Phone: +44 1279 635533
Fax: +44 1279 635262
e-mail: sales@jumo.co.uk
Internet: www.jumo.co.uk

**JUMO Process Control, Inc.**
8 Technology Boulevard
Canastota, NY 13032, USA
Phone: 315-697-JUMO
1-800-554-JUMO
Fax: 315-697-5867
e-mail: info@jumo.us
Internet: www.jumo.us



## Order details: Screw-in RTD temperature probe with terminal head form J

**(1) Basic type**

| | | | | | |
|---|---|---|---|---|---|
| | | | | 902030/10 | Screw-in RTD temperature probes with continuous sheath |
| | | | | 902030/11 | Screw-in RTD temperature probes with stepped sheath (with Ø 6 to Ø 3.8 mm; with Ø 8 to Ø 6 mm) |
| | | | | 902030/31 | Screw-in RTD temperature probes with stepped sheath for air measurement |
| | | | | 902030/80 | Screw-in RTD temperature probes with spring-loaded connection, 12 mm spring deflection, connection head rotatable by 360° |

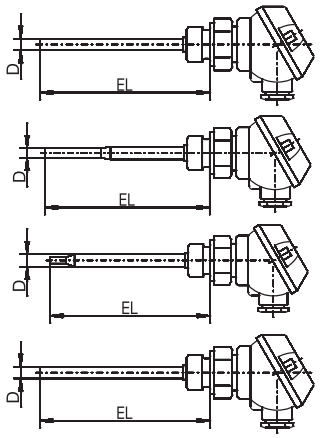


**(2) Operating temperature in °C**

| | | | | | |
|---|---|---|---|---|---|
| x | x | | | 647 | -20 to +150 °C (only in conjunction with class B and 1x Pt100/1x Pt1000 in 2-wire circuit) |
| | | | x | 378 | -50 to +180 °C |
| x | x | x | | 380 | -50 to +200 °C |
| x | x | | | 386 | -50 to +260 °C |
| x | x | | | 402 | -50 to +400 °C |

**(3) Measuring insert**

| | | | | | |
|---|---|---|---|---|---|
| x | x | x | x | 1001 | 1x Pt100 in 3-wire-circuit |
| x | x | x | x | 1003 | 1x Pt100 in 2-wire circuit |
| x | x | x | x | 1005 | 1x Pt1000 in 2-wire circuit |
| x | x | x | x | 1011 | 1x Pt100 in 4-wire circuit |
| x | x | x | x | 2003 | 2x Pt100 in 2-wire circuit |

**(4) Tolerance class according to EN 60751**

| | | | | | |
|---|---|---|---|---|---|
| x | x | x | x | 1 | Class B (standard) |
| x | x | x | x | 2 | Class A |

**(5) Protection tube diameter D in mm**

| | | | | | |
|---|---|---|---|---|---|
| x | x | x | | 6 | Ø 6 mm (standard) |
| | x | | x | 8 | Ø 8 mm |

**(6) Fitting length EL in mm (100 ≤ EL ≤ 1000)**

| | | | | | |
|---|---|---|---|---|---|
| x | | | x | 50 | 50 mm |
| x | x | x | x | 100 | 100 mm |
| x | x | x | x | 150 | 150 mm |
| x | x | x | x | 250 | 250 mm |
| x | x | x | x | 300 | 300 mm |
| x | x | x | x | ... | Specification in plain text (50 mm steps) |

**(7) Process connection**

| | | | | | |
|---|---|---|---|---|---|
| x | x | x | | 102 | Screw connection (thread) G 1/4 |
| x | x | x | | 103 | Screw connection (thread) G 3/8 |
| x | x | x | x | 104 | Screw connection (thread) G 1/2 |

**(8) Extra codes**

| | | | | | |
|---|---|---|---|---|---|
| x | x | x | x | 000 | without extra codes |
| x | x | x | x | 330 | 1x analog transmitter, 4 to 20 mA[1] output, Data sheet 70.7030 |

| | (1) | | (2) | | (3) | | (4) | | (5) | | (6) | | (7) | | (8) |
|---|---|---|---|---|---|---|---|---|---|---|---|---|---|---|---|
| **Order code** | | - | | - | | - | | - | | - | | - | | / | |
| **Order example** | 902030/10 | - | 402 | - | 1001 | - | 1 | - | 6 | - | 100 | - | 104 | / | 000 |

[1] Specify measuring range in plain text.

**JUMO GmbH & Co. KG**
Delivery address: Mackenrodtstraße 14,
36039 Fulda, Germany
Postal address: 36035 Fulda, Germany
Phone: +49 661 6003-0
Fax: +49 661 6003-607
e-mail: mail@jumo.net
Internet: www.jumo.net

**JUMO Instrument Co. Ltd.**
JUMO House
Temple Bank, Riverway
Harlow, Essex CM 20 2TT, UK
Phone: +44 1279 635533
Fax: +44 1279 635262
e-mail: sales@jumo.co.uk
Internet: www.jumo.co.uk

**JUMO Process Control, Inc.**
8 Technology Boulevard
Canastota, NY 13032, USA
Phone: 315-697-JUMO
1-800-554-JUMO
Fax: 315-697-5867
e-mail: info@jumo.us
Internet: www.jumo.us



## Stock versions

| (1) | | (2) | | (3) | | (4) | | (5) | | (6) | | (7) | | (8) | Part No. |
|---|---|---|---|---|---|---|---|---|---|---|---|---|---|---|---|
| 902030/10 | - | 380 | - | 2003 | - | 1 | - | 6 | - | 50 | - | 104 | / | 000 | 90/00533450 |
| 902030/10 | - | 380 | - | 2003 | - | 1 | - | 6 | - | 100 | - | 104 | / | 000 | 90/00533451 |
| 902030/10 | - | 380 | - | 2003 | - | 1 | - | 6 | - | 150 | - | 104 | / | 000 | 90/00533452 |
| 902030/10 | - | 402 | - | 1003 | - | 1 | - | 6 | - | 50 | - | 104 | / | 000 | 90/00055692 |
| 902030/10 | - | 402 | - | 1003 | - | 1 | - | 6 | - | 100 | - | 104 | / | 000 | 90/00055693 |
| 902030/10 | - | 402 | - | 1003 | - | 1 | - | 6 | - | 150 | - | 104 | / | 000 | 90/00055694 |
| 902030/10 | - | 402 | - | 1003 | - | 1 | - | 6 | - | 300 | - | 104 | / | 000 | 90/00065691 |
| 902030/10 | - | 402 | - | 1003 | - | 1 | - | 6 | - | 250 | - | 104 | / | 000 | 90/00533433 |
| 902030/10 | - | 402 | - | 2003 | - | 1 | - | 6 | - | 50 | - | 104 | / | 000 | 90/00383011 |
| 902030/10 | - | 402 | - | 2003 | - | 1 | - | 6 | - | 100 | - | 104 | / | 000 | 90/00526429 |
| 902030/10 | - | 402 | - | 2003 | - | 1 | - | 6 | - | 150 | - | 104 | / | 000 | 90/00533442 |
| 902030/10 | - | 402 | - | 1003 | - | 1 | - | 6 | - | 50 | - | 103 | / | 000 | 90/00478984 |
| 902030/10 | - | 402 | - | 1003 | - | 1 | - | 6 | - | 100 | - | 103 | / | 000 | 90/00424045 |
| 902030/10 | - | 380 | - | 1003 | - | 1 | - | 6 | - | 100 | - | 104 | / | 330(-40 to +60 °C) | 90/00533453 |
| 902030/10 | - | 647 | - | 1003 | - | 1 | - | 6 | - | 100 | - | 104 | / | 330(0 to 100 °C) | 90/00533454 |
| 902030/10 | - | 647 | - | 1003 | - | 1 | - | 6 | - | 150 | - | 104 | / | 330(0 to 100° C) | 90/00533468 |
| 902030/10 | - | 402 | - | 1005 | - | 1 | - | 6 | - | 100 | - | 104 | / | 000 | 90/00359611 |
| 902030/10 | - | 402 | - | 1005 | - | 1 | - | 6 | - | 150 | - | 104 | / | 000 | 90/00411610 |
| 902030/10 | - | 647 | - | 1003 | - | 1 | - | 6 | - | 50 | - | 104 | / | 000 | 90/00533448 |
| 902030/10 | - | 647 | - | 1003 | - | 1 | - | 6 | - | 100 | - | 104 | / | 000 | 90/00533449 |
| 902030/10 | - | 647 | - | 1003 | - | 1 | - | 6 | - | 150 | - | 104 | / | 000 | 90/00508957 |
| 902030/31 | - | 380 | - | 1003 | - | 1 | - | 6 | - | 75 | - | 104 | / | 000 | 90/00438406 |
| 902030/31 | - | 380 | - | 1003 | - | 1 | - | 6 | - | 100 | - | 104 | / | 000 | 90/00438408 |
| 902030/31 | - | 380 | - | 1003 | - | 1 | - | 6 | - | 150 | - | 104 | / | 000 | 90/00438409 |