efector200

ifm electronic

Accessories

E20874

Mounting set

Ø 30.2 mm

Clamp mounting

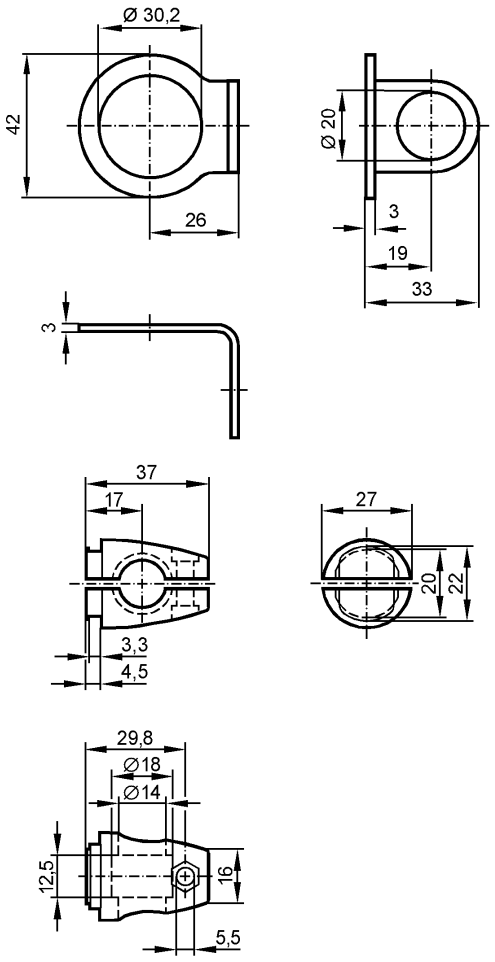

Made in Germany

Design		for types OI, II, KI
Type of mounting		free-standing M12
Housing materials		fixture: stainless steel 316Ti / 1.4571; clamp: stainless steel (316C)
Weight	[kg]	0.212
Accessories (included)		screw, M12 x 55