LED frequency displays | Measuring range 1/min or 1/sec HRA-measurement (DC) | Codix 522



The Codix 522 is a simple voltage powered frequency display / tachometer.

Display in 1/min or 1/sec, freely scalable, for fast and slow count pulses, with 6-digit LED display for NPN, PNP input signals, with fast HRA measurement system (High Rate Accuracy).



Supply voltage | DIN front bezel | Temperature range | High protection level | Menu-driven programming | Frequency display/ Tachometer | Frequency display with HRA

Powerful

- Very bright LED display, 8 mm high.
- Fast count input – input frequency max. 60 kHz.
- Robust housing – IP65 protected.
- Very accurate precise frequency measurement principle (HRA - High Rate Accuracy System)
  Frequencies up to 38 Hz are calculated using time-interval (period duration) measurement. Frequencies > 38 Hz are calculated using a special time base (gate time) measurement. A very high accuracy of < 0.1 % is achieved, even with very short gate times. The resulting measurement is available after a max. of 50 ms.

User-friendly and universal

- Large keys – can also be operated when wearing gloves.
- Simple uniform menu-driven programming and operation. Possible to enter the programming also during operation with a confirmation prompt.
- Individually programmable scaling – multiplication and division factor (0.0001 to 99.9999), to display corresponding engineering units, e.g. frequency in Hz and speed in RPM.
- Programmable decimal point, can be set from 0.0 to 0.000 (this determines the resolution).
- Programmable delay until 0 is displayed.
- Display in 1/min or 1/sec.
- As an alternative to the HTL inputs, devices with a 4 ... 30 V DC input level are available.
- Optional output for zero-speed monitoring.

Order code

6.522	.	01	X (a)	.	3	X (b)	0

(a) *Output*
1 = optocoupler output
2 = no output [1]

(b) *Input switching level*
0 = Standard (HTL) [1]
A = 4 ... 30 V DC level

Delivery specification
- Pulse counter
- Mounting clip
- Front bezel for screw mounting (T008181) 56 x 40 mm [2.20 x 1.57"], panel cut-out 50 x 25 mm [1.97 x 0.98"]
- Front bezel for clip mounting (T008180) 53 x 28 mm [2.09 x 1.10"], panel cut-out 50 x 25 mm [1.97 x 0.98"]
- Gasket
- Instruction manual, multilingual

1) Stock types

© Fritz Kübler GmbH, subject to errors and changes. 03/2023

LED frequency displays | Measuring range 1/min or 1/sec HRA-measurement (DC) | Codix 522

Accessories / Mounting examples

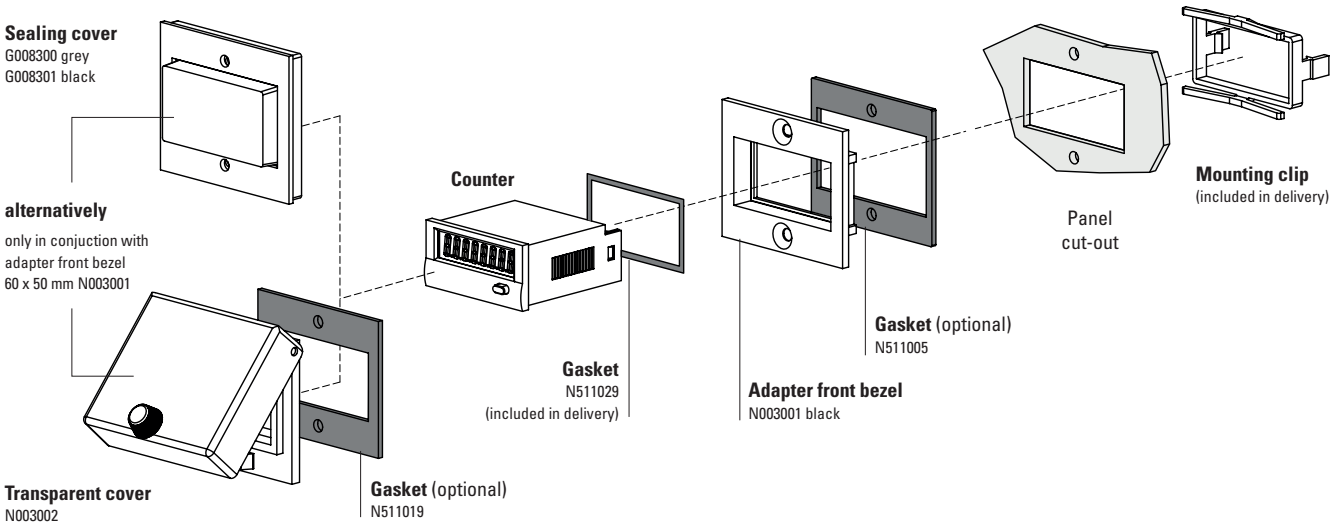

		Type / size	Description		Order no.	suitable gasket
Adapter front bezel		**53 x 28 mm [2.09 x 1.10“]**	for cut-out 50 x 25 mm [1.97 x 0.98“] to cut-out 45 x 22.2 mm [1.77 x 0.94“]	grey black anthracite	**T008164** **T008165** **T008180**	**N511015**
		**56 x 40 mm [2.20 x 1.57“]**	for cut-out 50 x 25 mm [1.97 x 0.98“] to cut-out 45 x 22.2 mm [1.77 x 0.94“] screw mounting	black anthracite	**T008161** **T008181**	**N511045**
		**72 x 36 mm [2.83 x 1.42“]**	for cut-out 68 x 33 mm [2.68 x 1.30“] to cut-out 45 x 22.2 mm [1.77 x 0.94“]	black and silver anodised as set	**162704Set**	–
		**60 x 50 mm [2.36 x 1.97“]**	for cut-out 54 x 29 mm [2.13 x 1.14“] to cut-out 45 x 22.2 mm [1.77 x 0.94“] screw mounting	black	**N003001**	**N511005**
		**48 x 48 mm [1.89 x 1.89“]**	for cut-out 45 x 45 mm [1.77 x 1.77“] to cut-out 45 x 22.2 mm [1.77 x 0.94“]	black	**T008883**	–
Sealing cover IP65		**K1**	only in conjuction with adapter front bezel 60 x 50 mm N003001	transparent / grey transparent / black	**G008300** **G008301**	–
Transparent cover IP65		**1 Dv** (mounted on bezel)	cover lockable, for cut-out 54 x 29 mm [2.13 x 1.14“], only in conjuction with adapter front bezel 60 x 50 mm N003001	transparent / black	**N003002**	**N511019**
Gasket counter			48 x 24 mm (for installation in adapter front bezel) 49 x 25 mm		**N511029** **N511034**	
Mounting frame		**cut-out 50 x 25 mm [1.97 x 0.98“]**	via adapter T008180 for snap-on mounting on 35 mm [1.38“] top-hat DIN rail	chromated	**G300004**	–
Enclosure blind		**48 x 24 mm [1.89 x 0.94“]**	for cut-out 45 x 22.2 mm [1.77 x 0.94“] and cut-out 50 x 25 mm [1.97 x 0.98“]	anthracite	**G003836**	–

incl. in delivery

© Fritz Kübler GmbH, subject to errors and changes. 03/2023

LED frequency displays | Measuring range 1/min or 1/sec HRA-measurement (DC) | Codix 522

Technical data

General technical data

Display		6 digits, red 7 segment LED display; 8 mm [0.32"] high
Data backup		EEPROM
Operating temperature	10 ... 26 V DC	-20 °C ... +65 °C [-4 °F ... +149 °F]
	> 26 ... 30 V DC	-20 °C ... +55 °C [-4 °F ... +131 °F] (non-condensing)
Storage temperature		-25 °C ... +70 °C [-13 °F ... +158 °F]

Electrical characteristics

Supply voltage	10 ... 30 V DC, with integrated reverse polarity protection
Current consumption	max. 50 mA

Mechanical characteristics

Housing	front panel mount 48 x 24 mm [1.89 x 0.94"] acc. to DIN 43700; RAL 7021, dark grey
Protection	IP65 (front side)
Weight	approx. 50 g [1.76 oz]
Vibration resistance acc. to EN 60068-2-6	10 ... 55 Hz / 1 mm [0.04"] / 30 min
Shock resistance acc. to EN 60068-2-27	100 G: 2 ms 10 G: 6 ms

Inputs

Polarity of inputs		programmable, NPN or PNP
Input resistance		approx. 5 kΩ
Counting frequency		max. 60 kHz, can be damped to 30 Hz
Measurement principle / Accuracy		Gate and/or time interval (period duration) measure ment, with high accuracy <0.1 % (HRA)
Input switching level (HTL)	LOW	0 ... 0.2 x U_B [V DC]
	HIGH	0.6 x U_B ... 30 V DC
Input switching level at 4 ... 30 V DC		
	LOW	0 ... 2 V DC
	HIGH	4 ... 30 V DC

Outputs (optional)

Optocoupler output	max. 30 V DC, 10 mA

Approvals

UL compliant in accordance with	File no. E128604
CE compliant in accordance with	
EMC Directive	2014/30/EU
RoHS Directive	2011/65/EU
UKCA compliant in accordance with	
EMC Regulations	S.I. 2016/1091
RoHS Regulations	S.I. 2012/3032

Applications for speed and frequency displays

- Rotary speed applications, e.g. OEM equipment or retrofitting to drilling machines
- OEM equipment for flow rate measuring, e.g. current flow rate; production data such as volume/time
- Speed applications on motors, turbines, machines; feed-rate measurement
- Recording of production rates
- Frequency measurement

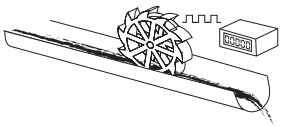

Mass flow rate

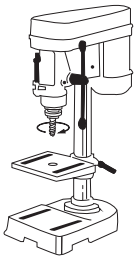

Drilling machine head, rotary speed

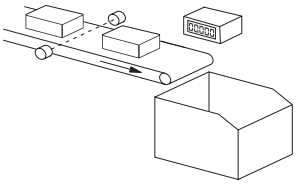

Production rate

Block diagram

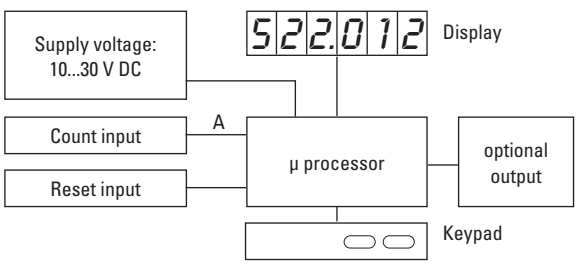

Terminal assignment

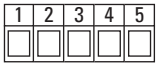

PIN	without optocoupler
1	10 ... 30 V DC
2	0 V GND
3	INP
4	–
5	–

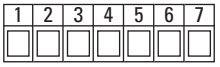

PIN	with optocoupler (NPN)
1	10 ... 30 V DC
2	0 V GND
3	INP
4	–
5	–
6	Emitter
7	Collector

© Fritz Kübler GmbH, subject to errors and changes. 03/2023

LED frequency displays | **Measuring range 1/min or 1/sec HRA-measurement (DC)** | **Codix 522**

Dimensions

Dimensions in mm [inch]

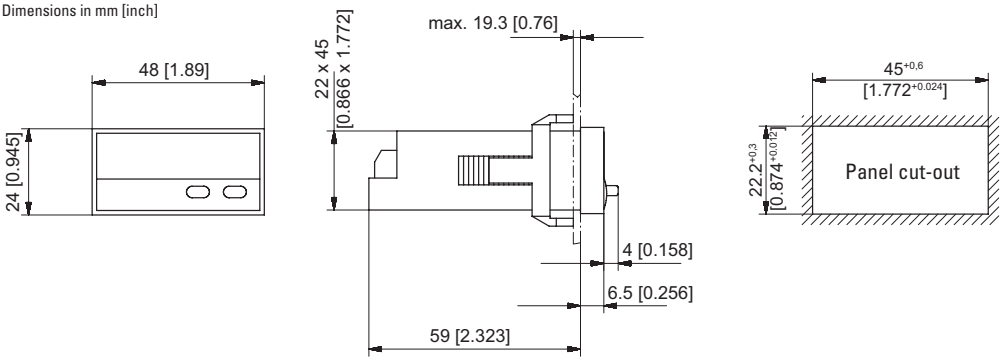

Front bezel for clip mounting (included in delivery)

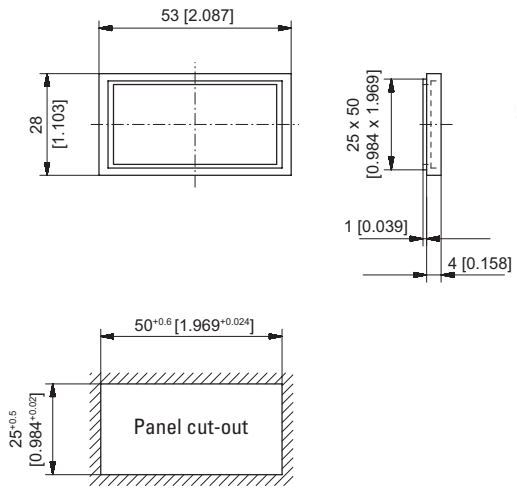

Front bezel for screw mounting (included in delivery)

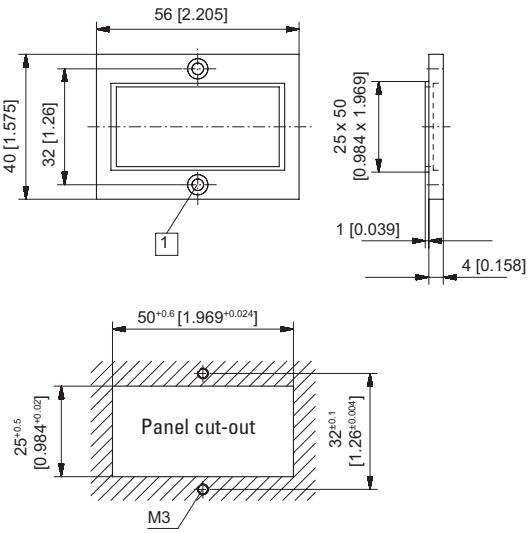

1 Countersinking Af3, DIN 74

© Fritz Kübler GmbH, subject to errors and changes. 03/2023