Product data sheet
Characteristics

XUK9TAH2MM12
photo-electric laser sensor - XUK - reflex - Sn 70m - 2Q 1Qa 3IN - hoisting app



Main

Range of product	OsiSense XU
Series name	Application hoisting
Electronic sensor type	Photo-electric sensor
Sensor name	XUK
Sensor design	Compact 50 x 50
Detection system	Polarised reflex
Material	Plastic
Type of output signal	Analogue + discrete
Supply circuit type	DC
Wiring technique	8-wire
Discrete output type	PNP or NPN
Discrete output function	1 NO or 1 NC programmable
Analogue output range	4...20 mA
Electrical connection	1 male connector M12, 8 pins
Product specific application	Distance measurement on reflector
Emission	Red laser polarised reflex (class 1) conforming to IEC 60825-1
[Sn] nominal sensing distance	70 m polarised reflex need reflector XUZC250

Complementary

Enclosure material	ABS/PC
Lens material	PMMA
Maximum sensing distance	70 m polarised reflex need reflector XUZC250
Output type	Analog Solid state
Output function governance	Light or dark programmable
Add on output	With alarm output
Add on input	Test by emission breaking
Status LED	1 LED (yellow) for output state 1 LED (green/yellow) for supply on/output state
[Us] rated supply voltage	12...24 V DC with reverse polarity protection
Supply voltage limits	10...30 V DC
Switching capacity in mA	<= 100 mA (overload and short-circuit protection)
Switching frequency	<= 1.5 kHz
Voltage drop	<= 2 V (closed state)
Current consumption	<= 35 mA (no-load)
Delay first up	< 300 ms
Delay response	<= 10 ms
Delay recovery	<= 10 ms
Setting-up	Using teach button or remote teaching
Depth	50 mm
Height	50 mm
Width	23 mm
Product weight	0.035 kg

The information provided in this documentation contains general descriptions and/or technical characteristics of the performance of the products contained herein.
This documentation is not intended as a substitute for and is not to be used for determining suitability or reliability of these products for specific user applications.
It is the duty of any such user or integrator to perform the appropriate and complete risk analysis, evaluation and testing of the products with respect to the relevant specific application or use thereof.
Neither Schneider Electric Industries SAS nor any of its affiliates or subsidiaries shall be responsible or liable for misuse of the information contained herein.

Environment

Product certifications	CE CULus Ecolab
Ambient air temperature for operation	-20...50 °C, UL certified -30...50 °C
Ambient air temperature for storage	-30...60 °C
Vibration resistance	7 gn (f = 10...55 Hz) conforming to IEC 60068-2-6
Shock resistance	10 gn (duration = 11 ms) conforming to IEC 60068-2-27
IP degree of protection	IP67 conforming to IEC 60529 IP69K conforming to DIN 40050

Offer Sustainability

Sustainable offer status	Not Green Premium product
RoHS (date code: YYWW)	Will not be Compliant

Dimensions

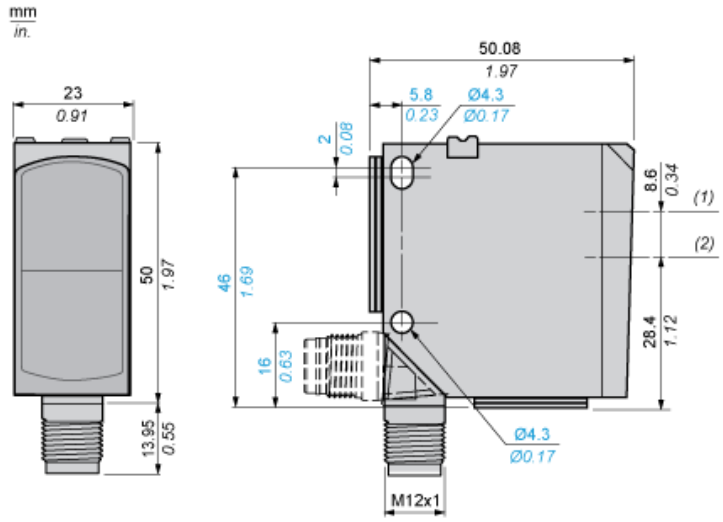

(1) Transmitter optical axis
(2) Receiver optical axis

Connections and Schema

Connector Wiring

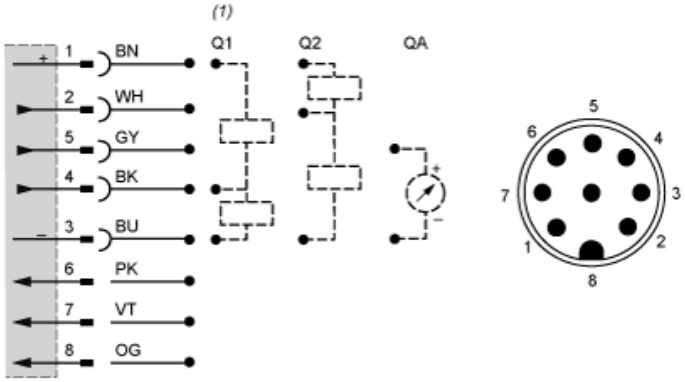

(1) Auto-detect
1 : + UB (BN : Brown)
2 : Q2 - PNP, NO (WH: White)
3 : -UB (BU: Blue)
4 : Q1 - PNP, NO (BK: Black)
5 : QA - 4…20 mA (GY: Grey)
6 : IN1 - Teach-in (PK: Pink)
7 : IN2 - Teach and activated tandem (VT: Purple)
8 : IN3 - Beam off (OG: Orange)

Mounting

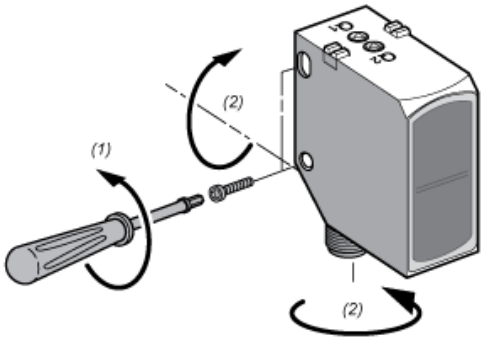

(1) < 1,5 Nm (13 lb-in)
(2) < 1 Nm (8.85 lb-in)