

Model Number

NBB15-U1-E0

Features

- **Sensor head bidirectional and rotatable**
- **4 LEDs indicator for 360° visibility**
- **15 mm flush**

Accessories

MHW 01
Modular mounting bracket

V1-M20-80
Receptacles, M12/M20; plastic version

V1-G
Female connector, M12, 4-pin, field attachable

V1-W
Female connector, M12, 4-pin, field attachable

Technical Data

General specifications		
Switching element function		NPN NO
Rated operating distance	s_n	15 mm
Installation		flush
Output polarity		DC
Assured operating distance	s_a	0 ... 12.15 mm
Reduction factor r_{Al}		0.33
Reduction factor r_{Cu}		0.31
Reduction factor r_{304}		0.74
Reduction factor r_{Brass}		0.41
Nominal ratings		
Operating voltage	U_B	10 ... 30 V
Switching frequency	f	0 ... 200 Hz
Hysteresis	H	typ. 5 %
Reverse polarity protection		reverse polarity protected
Short-circuit protection		pulsing
Voltage drop	U_d	≤ 2 V
Operating current	I_L	0 ... 200 mA
Off-state current	I_r	0 ... 0.5 mA typ. 0.1 µA at 25 °C
No-load supply current	I_0	≤ 20 mA
Time delay before availability	t_v	80 ms
Operating voltage indicator		LED, green
Switching state indicator		LED, yellow
Functional safety related parameters		
$MTTF_d$		1510 a
Mission Time (T_M)		20 a
Diagnostic Coverage (DC)		0 %
Ambient conditions		
Ambient temperature		-25 ... 85 °C (-13 ... 185 °F)
Mechanical specifications		
Connection type		screw terminals
Core cross-section		≤ 2.5 mm^2
Housing material		PA/metal with epoxy powder coating
Sensing face		PA
Housing base		plastic
Degree of protection		IP68 / IP69K
Mass		225 g
Note		Tightening torque: 1.8 Nm (housing) Tightening torque: 1.0 Nm (Screw terminal)
Compliance with standards and directives		
Standard conformity		
Standards		EN 60947-5-2:2007 IEC 60947-5-2:2007
Approvals and certificates		
UL approval		cULus Listed, General Purpose
CSA approval		cCSAus Listed, General Purpose
CCC approval		CCC approval / marking not required for products rated ≤36 V

Dimensions

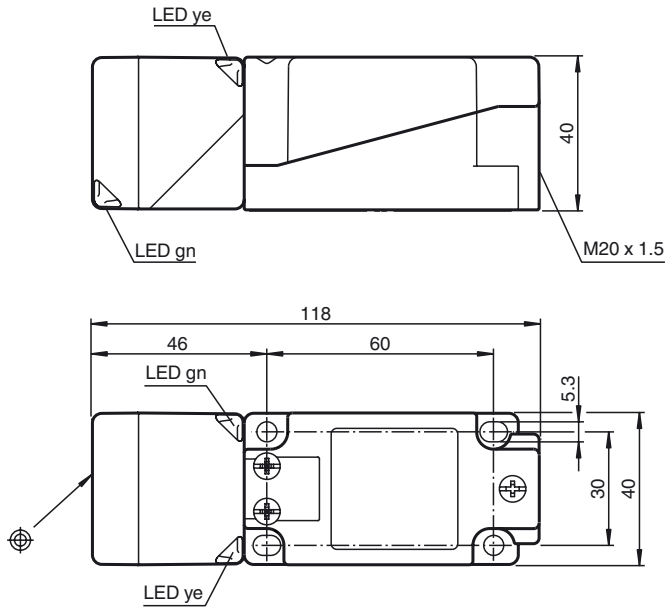

Release date: 2015-02-24 10:36 Date of issue: 2015-02-24 194760_eng.xml

Electrical Connection

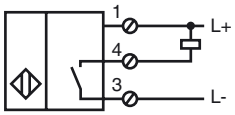

Release date: 2015-02-24 10:36 Date of issue: 2015-02-24 194760_eng.xml

Refer to “General Notes Relating to Pepperl+Fuchs Product Information”.
Pepperl+Fuchs Group www.pepperl-fuchs.com
USA: +1 330 486 0001 fa-info@us.pepperl-fuchs.com
Germany: +49 621 776 4411 fa-info@de.pepperl-fuchs.com
Singapore: +65 6779 9091 fa-info@sg.pepperl-fuchs.com
PEPPERL+FUCHS SENSING YOUR NEEDS